STATE	STATE PROJECT REFERENCE NO.	SHEET NO.	TOTAL SHEETS
N.C.	DF18313.2011461	1	

STATE PROJ. NO.	F. A. PROJ. NO.	DESCRIPTION
DF18313.2011461		PE & CONST.

STATE OF NORTH CAROLINA
DIVISION OF HIGHWAYS

BUNCOMBE COUNTY

LOCATION: AZALEA RD E. BETWEEN AZALEA RD. AND GASHES CREEK RD

TYPE OF WORK: GRADING, DRAINAGE, PAVING, AND TEMPORARY STRUCTURE

See Sheet 1A For Index of Sheets

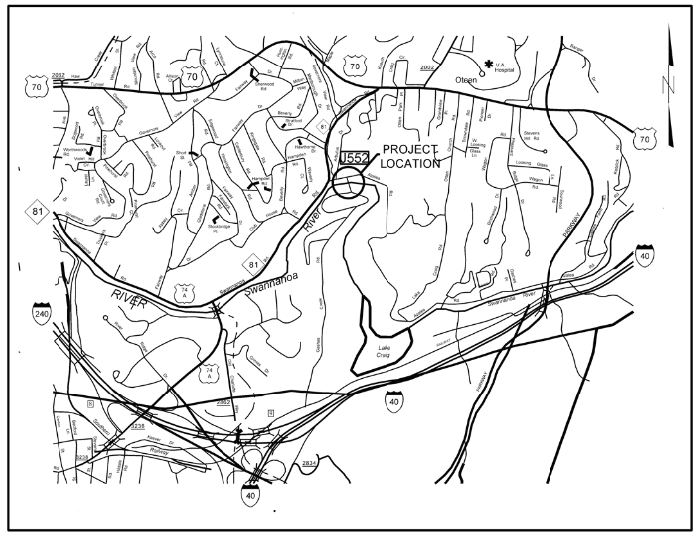

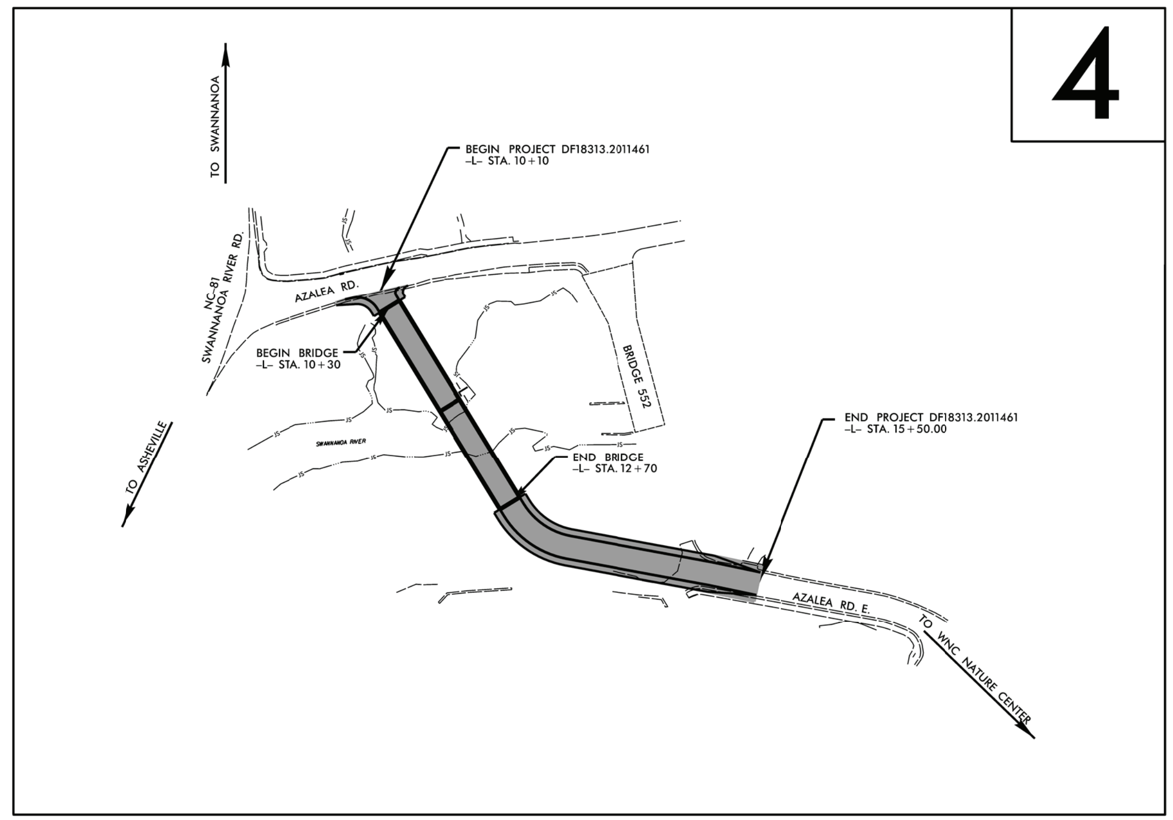

DOCUMENT NOT CONSIDERED FINAL UNLESS ALL SIGNATURES COMPLETED

GRAPHIC SCALES

PLANS: 40 20 0 40 80

PROFILE (HORIZONTAL): 50 25 0 50 100

PROFILE (VERTICAL): 5 2.5 0 5 10

PROJECT LENGTH

LENGTH OF ROADWAY PROJECT DF18313.2011461 = 0.057 MILES

LENGTH OF STRUCTURE PROJECT DF18313.2011461 = 0.045 MILES

TOTAL LENGTH OF PROJECT DF18313.2011461 = 0.102 MILES

Prepared in the Office of:

DIVISION OF HIGHWAYS

55 Orange St., Asheville NC, 28801

2024 STANDARD SPECIFICATIONS

RIGHT OF WAY DATE: N/A

LETTING DATE: JULY 15, 2026

GABRIEL L. JOHNSON, PE
PROJECT ENGINEER

WILLIAM CHASE CARVER, PE
PROJECT DESIGN ENGINEER

HYDRAULICS ENGINEER

Signed by: Marc T. Shown, PE
SIGNATURE: P.E.

NORTH CAROLINA PROFESSIONAL ENGINEER SEAL 020870 Marc T. Shown

ROADWAY DESIGN ENGINEER

Signed by: William C Carver 06/17/2026
SIGNATURE: P.E.

NORTH CAROLINA PROFESSIONAL ENGINEER SEAL 041993 WILLIAM C. CARVER

STATE OF NORTH CAROLINA • DEPARTMENT OF TRANSPORTATION

TIP PROJECT: DF18313.2011461

CONTRACT: DM00515

09/08/99
16-JUN-2026 11:11
S:\DDC\Projects\Buncombe\Azalea Rd Bridge 552_Gashes Creek_DF18313.2011461\Roadway\Proj\AzaleaRdBridge552_ddc_tsh.dgn
$$$$USERNAME$$$$

PROJECT REFERENCE NO.	SHEET NO.
DF18313.2011461	1A

ROADWAY DESIGN ENGINEER

NORTH CAROLINA PROFESSIONAL SEAL 041993 ENGINEER WILLIAM C. CARVER

Signed by: William C Carver 06/17/2026

DOCUMENT NOT CONSIDERED FINAL UNLESS ALL SIGNATURES COMPLETED

INDEX OF SHEETS

SHEET NUMBER	SHEET
1	TITLE SHEET
1A	INDEX OF SHEETS, GENERAL NOTES, AND STANDARD DRAWINGS
1B	CONVENTIONAL SYMBOLS
2A-1	PAVEMENT SCHEDULE AND TYPICAL SECTIONS
3B-1	ROADWAY SUMMARIES
3D-1 THRU 3D-2	DRAINAGE SUMMARIES
4 THRU 5	PLAN AND PROFILE SHEET
RW-01	SURVEY CONTROL SHEETS
PMP/SIGN-1 THRU PMP/SIGN-2	PAVEMENT MARKING PLANS
EC-1 THRU EC-7	EROSION CONTROL PLANS
X-1 THRU X-1A	CROSS-SECTION SUMMARY SHEET
X-2 THRU X-9	CROSS-SECTIONS

2024 ROADWAY ENGLISH STANDARD DRAWINGS

EFF. 01-16-2024
REV.

The following Roadway Standards as appear in "Roadway Standard Drawings" Highway Design Branch - N. C. Department of Transportation - Raleigh, N. C., Dated January, 2024 are applicable to this project and by reference hereby are considered a part of these plans:

STD.NO.	TITLE
DIVISION 2 - EARTHWORK	
200.02	Method of Clearing - Method II
225.02	Guide for Grading Subgrade - Secondary and Local
225.05	Method of Obtaining Superelevation - Two Lane Pavement
DIVISION 3 - PIPE CULVERTS	
300.01	Method of Pipe Installation
DIVISION 5 - SUBGRADE, BASES AND SHOULDERS	
560.01	Method of Shoulder Construction - High Side of Superelevated Curve - Method I
DIVISION 6 - ASPHALT BASES AND PAVEMENTS	
654.01	Pavement Repairs
DIVISION 8 - INCIDENTALS	
840.03	Frame, Grates and Hood - for Use on Standard Catch Basin
840.22	Frames and Wide Slot Sag Grates
840.31	Concrete Junction Box - 12" thru 66" Pipe
840.66	Drainage Structure Steps
852.01	Concrete Islands
862.01	Guardrail Placement
862.02	Guardrail Installation
862.03	Structure Anchor Units
876.01	Rip Rap in Channels and Ditches
876.02	Guide for Rip Rap at Pipe Outlets

GENERAL NOTES:

2024 SPECIFICATIONS
EFFECTIVE: 01-16-2024
REVISED:

GRADING AND SURFACING OR RESURFACING AND WIDENING:

THE GRADE LINES SHOWN DENOTE THE FINISHED ELEVATION OF THE PROPOSED SURFACING AT GRADE POINTS SHOWN ON THE TYPICAL SECTIONS. WHERE NO GRADE LINES ARE SHOWN, THE PROFILES SHOWN DENOTE THE TOP ELEVATION OF THE EXISTING PAVEMENT ALONG THE CENTER LINE OF SURVEY ON WHICH THE PROPOSED RESURFACING WILL BE PLACED. GRADE LINES MAY BE ADJUSTED BY THE ENGINEER IN ORDER TO SECURE A PROPER TIE-IN.

CLEARING:

CLEARING ON THIS PROJECT SHALL BE PERFORMED TO THE LIMITS ESTABLISHED BY METHOD II.

SUPERELEVATION:

ALL CURVES ON THIS PROJECT SHALL BE SUPERELEVATED IN ACCORDANCE WITH STD. NO. 225.05 USING THE RATE OF SUPERELEVATION AND RUNOFF SHOWN ON THE PLANS. SUPERELEVATION IS TO BE REVOLVED ABOUT THE GRADE POINTS SHOWN ON THE TYPICAL SECTIONS.

SHOULDER CONSTRUCTION:

ASPHALT, EARTH, AND CONCRETE SHOULDER CONSTRUCTION ON THE HIGH SIDE OF SUPERELEVATED CURVES SHALL BE IN ACCORDANCE WITH STD. NO. 560.02

SIDE ROADS:

THE CONTRACTOR WILL BE REQUIRED TO DO ALL NECESSARY WORK TO PROVIDE SUITABLE CONNECTIONS WITH ALL ROADS, STREETS, AND DRIVES ENTERING THIS PROJECT. THIS WORK WILL BE PAID FOR AT THE CONTRACT UNIT PRICE FOR THE PARTICULAR ITEMS INVOLVED.

GUARDRAIL:

THE GUARDRAIL LOCATIONS SHOWN ON THE PLANS MAY BE ADJUSTED DURING CONSTRUCTION AS DIRECTED BY THE ENGINEER. THE CONTRACTOR SHOULD CONSULT WITH THE ENGINEER PRIOR TO ORDERING GUARDRAIL MATERIAL.

BERM DITCHES:

BERM DITCHES SHALL BE CONSTRUCTED IN ACCORDANCE WITH STD. NO. 240.01 AT LOCATIONS SHOWN ON THE PLANS OR AS DIRECTED BY THE ENGINEER.

END BENTS:

THE ENGINEER SHALL CHECK THE STRUCTURE END BENT PLANS, DETAILS, AND CROSS SECTION PRIOR TO SETTING OF THE SLOPE STAKES FOR THE EMBANKMENT OR EXCAVATION APPROACHING A BRIDGE.

UTILITIES:

ANY RELOCATION OF EXISTING UTILITIES WILL BE ACCOMPLISHED BY OTHERS

PROJECT REFERENCE NO. | SHEET NO. 1B

9/10/2021

STATE OF NORTH CAROLINA, DIVISION OF HIGHWAYS
CONVENTIONAL PLAN SHEET SYMBOLS

Note: Not to Scale

BOUNDARIES AND PROPERTY:
- State Line
- County Line
- Township Line
- City Line
- Reservation Line
- Property Line
- Existing Iron Pin (EIP)
- Computed Property Corner
- Existing Concrete Monument (ECM)
- Parcel/Sequence Number
- Existing Fence Line
- Proposed Woven Wire Fence
- Proposed Chain Link Fence
- Proposed Barbed Wire Fence
- Existing Wetland Boundary
- Proposed Wetland Boundary
- Existing Endangered Animal Boundary
- Existing Endangered Plant Boundary
- Existing Historic Property Boundary
- Known Contamination Area: Soil
- Potential Contamination Area: Soil
- Known Contamination Area: Water
- Potential Contamination Area: Water
- Contaminated Site: Known or Potential

BUILDINGS AND OTHER CULTURE:
- Gas Pump Vent or U/G Tank Cap
- Sign
- Well
- Small Mine
- Foundation
- Area Outline
- Cemetery
- Building
- School
- Church
- Dam

HYDROLOGY:
- Stream or Body of Water
- Hydro, Pool or Reservoir
- Jurisdictional Stream — JS
- Buffer Zone 1 — BZ 1
- Buffer Zone 2 — BZ 2
- Flow Arrow
- Disappearing Stream
- Spring
- Wetland
- Proposed Lateral, Tail, Head Ditch — FLOW
- False Sump

RAILROADS:
- Standard Gauge — CSX TRANSPORTATION
- RR Signal Milepost — MILEPOST 35
- Switch — SWITCH
- RR Abandoned
- RR Dismantled

RIGHT OF WAY & PROJECT CONTROL:
- Primary Horiz Control Point
- Primary Horiz and Vert Control Point
- Secondary Horiz and Vert Control Point
- Vertical Benchmark
- Existing Right of Way Monument
- Proposed Right of Way Monument (Rebar and Cap)
- Proposed Right of Way Monument (Concrete)
- Existing Permanent Easement Monument
- Proposed Permanent Easement Monument (Rebar and Cap)
- Existing C/A Monument
- Proposed C/A Monument (Rebar and Cap)
- Proposed C/A Monument (Concrete)
- Existing Right of Way Line
- Proposed Right of Way Line
- Existing Control of Access Line
- Proposed Control of Access Line
- Proposed ROW and CA Line
- Existing Easement Line — E
- Proposed Temporary Construction Easement — E
- Proposed Temporary Drainage Easement — TDE
- Proposed Permanent Drainage Easement — PDE
- Proposed Permanent Drainage/Utility Easement — DUE
- Proposed Permanent Utility Easement — PUE
- Proposed Temporary Utility Easement — TUE
- Proposed Aerial Utility Easement — AUE

ROADS AND RELATED FEATURES:
- Existing Edge of Pavement
- Existing Curb
- Proposed Slope Stakes Cut — C
- Proposed Slope Stakes Fill — F
- Proposed Curb Ramp — CR
- Existing Metal Guardrail
- Proposed Guardrail
- Existing Cable Guiderail
- Proposed Cable Guiderail
- Equality Symbol
- Pavement Removal

VEGETATION:
- Single Tree
- Single Shrub
- Hedge
- Woods Line
- Orchard
- Vineyard — Vineyard

EXISTING STRUCTURES:
MAJOR:
- Bridge, Tunnel or Box Culvert — CONC
- Bridge Wing Wall, Head Wall and End Wall — CONC WW

MINOR:
- Head and End Wall — CONC HW
- Pipe Culvert
- Footbridge
- Drainage Box: Catch Basin, DI or JB — CB
- Paved Ditch Gutter
- Storm Sewer Manhole — S
- Storm Sewer — S

UTILITIES:
* SUE – Subsurface Utility Engineering
LOS – Level of Service – A,B,C or D (Accuracy)

POWER:
- Existing Power Pole
- Proposed Power Pole
- Existing Joint Use Pole
- Proposed Joint Use Pole
- Power Manhole — P
- Power Line Tower
- Power Transformer
- U/G Power Cable Hand Hole — PH
- H-Frame Pole
- U/G Power Line Test Hole (SUE – LOS A)*
- U/G Power Line (SUE – LOS B)* — P
- U/G Power Line (SUE – LOS C)* — P
- U/G Power Line (SUE – LOS D)* — P

TELEPHONE:
- Existing Telephone Pole
- Proposed Telephone Pole
- Telephone Manhole — T
- Telephone Pedestal — T
- Telephone Cell Tower
- U/G Telephone Cable Hand Hole — HH
- U/G Telephone Test Hole (SUE – LOS A)*
- U/G Telephone Cable (SUE – LOS B)* — T
- U/G Telephone Cable (SUE – LOS C)* — T
- U/G Telephone Cable (SUE – LOS D)* — T
- U/G Telephone Conduit (SUE – LOS B)* — TC
- U/G Telephone Conduit (SUE – LOS C)* — TC
- U/G Telephone Conduit (SUE – LOS D)* — TC
- U/G Fiber Optics Cable (SUE – LOS B)* — T FO
- U/G Fiber Optics Cable (SUE – LOS C)* — T FO
- U/G Fiber Optics Cable (SUE – LOS D)* — T FO

WATER:
- Water Manhole
- Water Meter
- Water Valve
- Water Hydrant
- U/G Water Line Test Hole (SUE – LOS A)*
- U/G Water Line (SUE – LOS B)*
- U/G Water Line (SUE – LOS C)*
- U/G Water Line (SUE – LOS D)*
- Above Ground Water Line — A/G Water

TV:
- TV Pedestal
- TV Tower
- U/G TV Cable Hand Hole — HH
- U/G TV Test Hole (SUE – LOS A)*
- U/G TV Cable (SUE – LOS B)* — TV
- U/G TV Cable (SUE – LOS C)* — TV
- U/G TV Cable (SUE – LOS D)* — TV
- U/G Fiber Optic Cable (SUE – LOS B)* — TV FO
- U/G Fiber Optic Cable (SUE – LOS C)* — TV FO
- U/G Fiber Optic Cable (SUE – LOS D)* — TV FO

GAS:
- Gas Valve
- Gas Meter
- U/G Gas Line Test Hole (SUE – LOS A)*
- U/G Gas Line (SUE – LOS B)* — G
- U/G Gas Line (SUE – LOS C)* — G
- U/G Gas Line (SUE – LOS D)* — G
- Above Ground Gas Line — A/G Gas

SANITARY SEWER:
- Sanitary Sewer Manhole
- Sanitary Sewer Cleanout
- U/G Sanitary Sewer Line — SS
- Above Ground Sanitary Sewer — A/G Sanitary Sewer
- SS Force Main Line Test Hole (SUE – LOS A)*
- SS Force Main Line (SUE – LOS B)* — FSS
- SS Force Main Line (SUE – LOS C)* — FSS
- SS Force Main Line (SUE – LOS D)* — FSS

MISCELLANEOUS:
- Utility Pole
- Utility Pole with Base
- Utility Located Object
- Utility Traffic Signal Box — S
- Utility Unknown U/G Line (SUE – LOS B)* — ?UTL
- U/G Tank; Water, Gas, Oil
- Underground Storage Tank, Approx. Loc. — UST
- A/G Tank; Water, Gas, Oil
- Geoenvironmental Boring
- Abandoned According to Utility Records — AATUR
- End of Information — E.O.I.

PROJECT REFERENCE NO.	SHEET NO.
DF18313.2011461	2A
RW SHEET NO.	
ROADWAY DESIGN ENGINEER	PAVEMENT ENGINEER

Signed by: William C Carver 06/18/2026

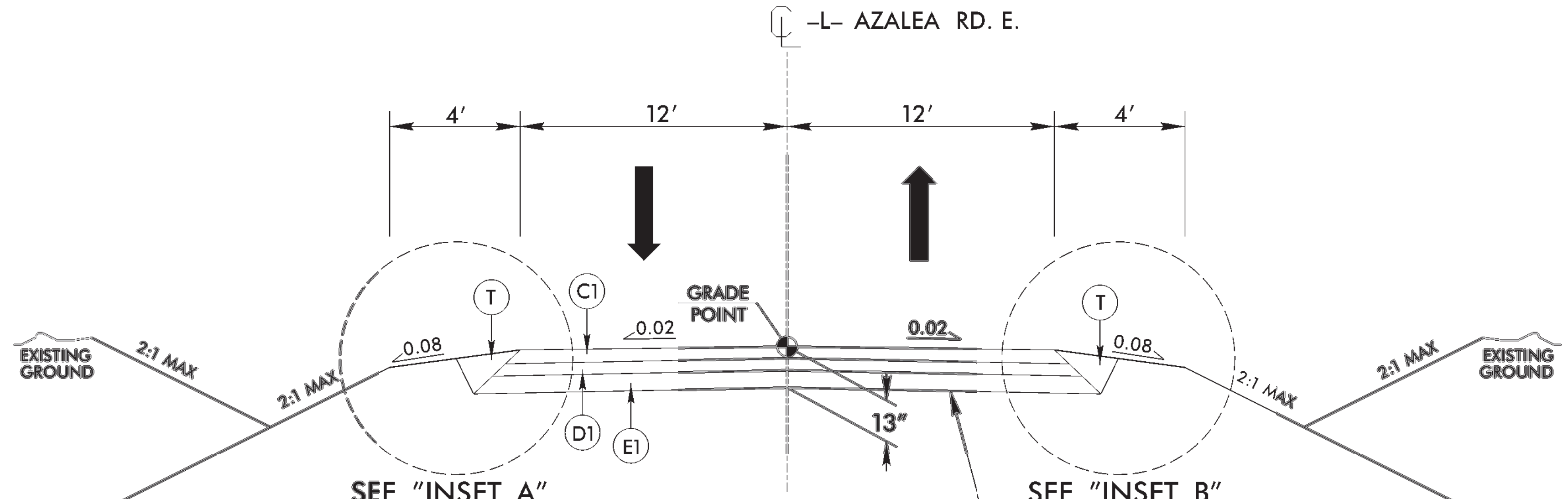

TYPICAL SECTION NO. 1

USE TYPICAL SECTION NO. 1
-L- STA. 10+10 TO 10+30
-L- STA. 12+70 TO 15+50

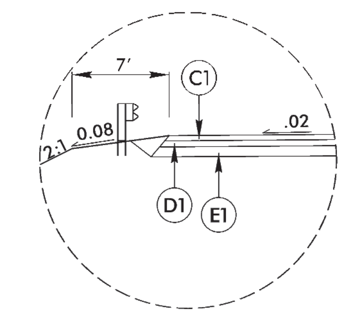

"INSET A"
USE -L- STA. 10+10 TO -L- STA. 10+30
-L- STA. 12+70 TO -L- STA.15+50

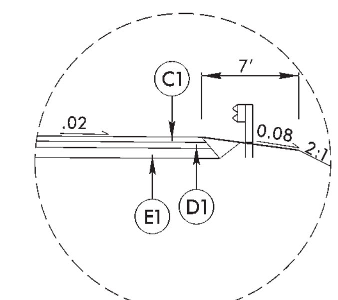

"INSET B"
USE -L- STA. 10+10 TO -L- STA. 10+30
-L- STA. 12+70 TO -L- STA. 14+50

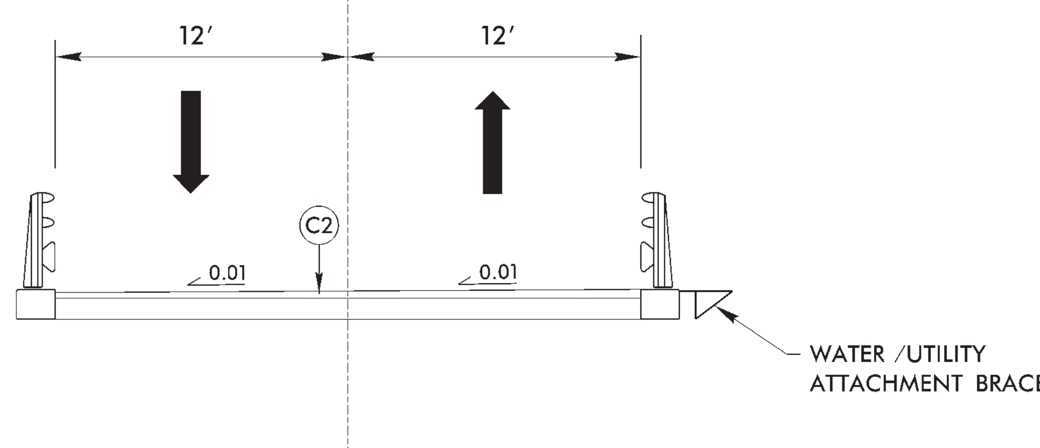

TYPICAL SECTION NO. 2

USE TYPICAL SECTION NO. 2
-L- STA. 10+30 TO 12+70

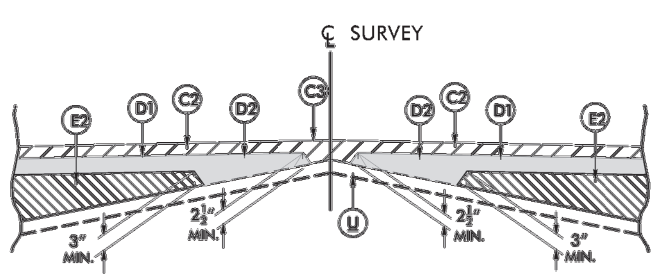

Detail Showing Method of Wedging

PAVEMENT SCHEDULE

C1	PROP. APPROX. 3" ASPHALT CONCRETE SURFACE COURSE, TYPE S9.5C, AT AN AVERAGE RATE OF 336 LBS. PER SQ. YARD
C2	PROP. APPROX. 1.5" ASPHALT CONCRETE SURFACE COURSE, TYPE S9.5C, AT AN AVERAGE RATE OF 168 LBS. PER SQ. YARD
D1	PROP. APPROX. 4" ASPHALT CONCRETE INTERMEDIATE COURSE, TYPE I19.0C, AT AN AVERAGE RATE OF 456 LBS. PER SQ. YD.
E1	PROP. APPROX. 6" ASPHALT CONCRETE BASE COURSE, TYPE B25.0C, AT AN AVERAGE RATE OF 342 LBS. PER SQ. YD. IN EACH OF TWO LAYERS.
T	EARTH MATERIAL

REVISIONS

8/17/99

COMPUTED BY: HTF DATE: 5/29/26
CHECKED BY: WCC DATE: 5/26/26

STATE OF NORTH CAROLINA
DIVISION OF HIGHWAYS

PROJECT REFERENCE NO.	SHEET NO.
DF18313.2011461	3B-1

SUMMARY OF EARTHWORK

STATION	STATION	UN/CL EXCAV.	EMBANK. +%	BORROW	WASTE
-L- 10+10	-L- 10+20 (BEGIN BRIDGE)		175	175	
-L- 12+70 (END BRIDGE)	-L- 15+50	52	14,735	14,683	
SUBTOTALS:		52	14,909	14,857	
SUBTOTALS:					
SUBTOTALS:					
SUBTOTALS:					
PROJECT TOTALS:					
GRAND TOTALS:		52	14,909	17,699	
SAY:		55		17,750	

CONTINGENCY ITEMS:
INCIDENTAL STONE = 25 TONS
UNDERCUT EXCAVATION = 10 CY
SELECT GRANULAR MATERIAL = 10 TONS
GEOTEXTILE FOR SOIL STABILIZATION = 25 SY
CLASS IV SUBGRADE STABILIZATION = 25 TONS
GEOTEXTILE FOR SUBGRADE STABILIZATION = 50 SY

Earthwork quantities are calculated by the Division Design and Construct Unit.

PAVEMENT REMOVAL SUMMARY

SURVEY LINE	STATION	STATION	LOCATION LT/RT/CL	YD²
-L-	14+65	15+50	CL	297
TOTAL:				297
SAY:				300

"W" = DISTANCE FROM EDGE OF LANE TO FACE OF GUARDRAIL.
TOTAL SHOULDER WIDTH = DISTANCE FROM EDGE OF TRAVEL LANE TO SHOULDER BREAK POINT.
FLARE LENGTH = DISTANCE FROM LAST SECTION OF PARALLEL GUARDRAIL TO END OF GUARDRAIL.
W = TOTAL WIDTH OF FLARE FROM BEGINNING OF TAPER TO END OF GUARDRAIL.
G = GATING IMPACT ATTENUATOR TYPE 350
NG = NON-GATING IMPACT ATTENUATOR TYPE 350

GUARDRAIL SUMMARY

SURVEY LINE	BEG. STA.	END STA.	LOCATION	LENGTH			WARRANT POINT		"W" DIST. FROM E.O.L.	TOTAL SHOUL. WIDTH	FLARE LENGTH		W		ANCHORS									IMPACT ATTENUATOR TYPE 350			SINGLE FACED GUARDRAIL	REMOVE EXISTING GUARDRAIL	REMOVE AND STOCKPILE EXISTING GUARDRAIL	REMARKS
				STRAIGHT	SHOP CURVED	DOUBLE FACED	APPROACH END	TRAILING END			APPROACH END	TRAILING END	APPROACH END	TRAILING END	GREU TL-2	XI	GRAU 350	M-350	TYPE III	CAT-1	VI MOD	BRC	AT-1	EA	G	NG				
-L-	10+04.07	10+30.00	RT		37.5		10+30.00		1'-3.5'	7'									1											
-L-	10+21.86	10+30.00	LT		25			10+30.00	1'-3.5'	7'									1											
-L-	12+70.00	14+50.00	RT	100	100		12+70.00		1'-4'	7'	25'				1				1											
-L-	12+70.00	15+50.00	LT	200	75			12+70.00	1'-4'	7'		25'			1				1											
		SUBTOTAL		300'	237.5'																									
		LESS DEDUCTIONS:																												
		GREU TL-2	2 @ 25'	-50'																										
		TYPE III	4 @ 18.75'		-75'																									
			TOTALS	250'	162.5																									
			SAY	250'	162.5																									

COMPUTED BY: HTF	DATE: 5/20/26
CHECKED BY: WCC	DATE: 5/20/26

PROJECT REFERENCE NO.	SHEET NO.
DF18313.2011461	3D-1

STATE OF NORTH CAROLINA
DIVISION OF HIGHWAYS

NOTE: Invert Elevations are for Bid Purposes only and shall not be used for project construction stakeout. See "Standard Specifications For Roads and Structures, Section 300-5".

LIST OF PIPES, ENDWALLS, ETC. (FOR PIPES 54" & OVER)

STATION / SIZE / THICKNESS OR GAUGE	LOCATION (LT, RT, OR CL)	STRUCTURE NO. FROM	STRUCTURE NO. TO	TOP ELEVATION	INVERT ELEVATION	INVERT ELEVATION	SLOPE CRITICAL	CLASS III R.C. PIPE (UNLESS NOTED OTHERWISE) 54"	60"	66"	72"	78"	84"	C.S. PIPE 54" .109	54" .138	54" .168	54" SHOP ELONGATED .138	54" SHOP ELONGATED .168	60" .138	60" .168	66" .138	66" .168	72" .138	72" .168	STRUCTURAL PLATE PIPE 60" 12	60" 10	66" 12	66" 10	72" 12	72" 10	REINFORCED ENDWALLS WITH R.C. - C.Y.	REINFORCED ENDWALLS WITH C.S. - C.Y.	MASONRY DRAINAGE STRUCTURES CUBIC YARDS	C.B. STD. 840.01 OR STD. 840.02	FRAME, GRATES AND HOOD STANDARD 840.03 TYPE OF GRATE E	F	G	CONCRETE TRANSITIONAL SECTION CATCH BASIN	CONCRETE TRANSITIONAL SECTION DROP INLET	J.B. STD. 840.31	M.H. FRAME AND COVER STD. 840.54	REINF. CONC. FLARED END SECTIONS NO. & SIZE	CORR. STEEL FLARED END SECTIONS NO. & SIZE	REINF. CONC. ELBOWS NO. & SIZE	CORR. STEEL ELBOWS NO. & SIZE	CONC. COLLARS CL. "B" C.Y. STD 840.72	PIPE REMOVAL LIN.FT.	REMARKS
10+30	RT	401		2027.8																																				1	1							
		401	402		2021.0	2016.0													24																													

ABBREVIATIONS

- C.B. CATCH BASIN
- N.D.I. NARROW DROP INLET
- D.I. DROP INLET
- G.D.I. GRATED DROP INLET
- G.D.I. (N.S.) GRATED DROP INLET (NARROW SLOT)
- J.B. JUNCTION BOX
- M.H. MANHOLE
- T.B.D.I. TRAFFIC BEARING DROP INLET
- T.B.J.B. TRAFFIC BEARING JUNCTION BOX

6/21/00

COMPUTED BY: HTF DATE: 5/20/26
CHECKED BY: WCC DATE: 5/20/26

PROJECT REFERENCE NO. DF18313.2011461 | SHEET NO. 3D-2

STATE OF NORTH CAROLINA
DIVISION OF HIGHWAYS
SUB-REGIONAL & REGIONAL
LIST OF PIPES, ENDWALLS, ETC. (FOR PIPES 48" & UNDER)

NOTE: Invert Elevations are for Bid Purposes only and shall not be used for project construction stakeout.
See "Standard Specifications For Roads and Structures, Section 300-5".

STATION / SIZE / THICKNESS OR GAUGE	LOCATION (LT, RT, OR CL)	STRUCTURE NO. FROM	STRUCTURE NO. TO	TOP ELEVATION	INVERT ELEVATION	INVERT ELEVATION	SLOPE CRITICAL	DRAINAGE PIPE (RCP, CSP, CAAP, HDPE, or PVC) 12"	15"	18"	24"	30"	36"	42"	48"	DO NOT USE RCP	DO NOT USE CSP	DO NOT USE CAAP	DO NOT USE HDPE	C.S. PIPE 12" .064	15" .064	18" .064	24" .064	36" .079	42" .109	48" .109	R.C. PIPE (CLASS III) 15"	18"	24"	30"	36"	42"	48"	R.C. PIPE (CLASS IV) 12"	15"	18"	24"	30"	36"	42"	48"	*** R. C. PIPE (CLASS V)	*** R. C. PIPE CULVERTS, CONTRACTOR DESIGN PIPE	*** R. C. PIPE CULVERTS, CONTRACTOR DESIGN PIPE	15" SIDE DRAIN PIPE	18" SIDE DRAIN PIPE	ENDWALLS STD. 838.01, STD. 838.11 OR STD. 838.80 (UNLESS NOTED OTHERWISE) CU. YDS. R.C.P.	C.S.P.	QUANTITIES FOR DRAINAGE STRUCTURES * TOTAL L.F. FOR PAY QUANTITY SHALL BE COL. 'A' + (1.3 X COL.'B') PER EACH (0' THRU 5.0')	LIN. FT. A 5.0' THRU 10.0'	B 10.0' AND ABOVE	C.B. STD. 840.01 OR STD. 840.02	FRAME, GRATES AND HOOD STANDARD 840.03 TYPE OF GRATE E	F	G	CONCRETE TRANSITIONAL SECTION CATCH BASIN	DROP INLET		G.D.I. FRAME WITH GRATE STD. 840.22	G.D.I. FRAME WITH TWO GRATES STD. 840.22	G.D.I. (N.S.) FRAME WITH GRATE STD. 840.24	G.D.I. (N.S.) FRAME WITH TWO GRATES STD. 840.24	J.B. STD. 840.31 OR 840.32	CORR. STEEL ELBOWS NO. & SIZE	CONC. COLLARS CL. "B" C.Y. STD 840.72	CONC. & BRICK PIPE PLUG, C.Y. STD. 840.71	PIPE REMOVAL LIN.FT.	REMARKS
10+72		EC 493	EC 494		2014.9	2013.7								30																																																									TEMPORARY PIPE

ABBREVIATIONS

- C.B. CATCH BASIN
- N.D.I. NARROW DROP INLET
- D.I. DROP INLET
- G.D.I. GRATED DROP INLET
- G.D.I. (N.S.) GRATED DROP INLET (NARROW SLOT)
- J.B. JUNCTION BOX
- M.H. MANHOLE
- T.B.D.I. TRAFFIC BEARING DROP INLET
- T.B.J.B. TRAFFIC BEARING JUNCTION BOX

4/24/86

PROJECT REFEFENCE NO.	SHEET NO.
DF18313.2011461	4
R/W SHEET NO.	
ROADWAY DESGN ENGINEER	HYDRAULICS ENGINEER
NORTH CAROLINA PROFESSIONAL SEAL 041993 ENGINEER WILLIAM C. CARVER	NORTH CAROLINA PROFESSIONAL SEAL 020870 ENGINEER
Signed by: William C Carver 5/17/2026	Signed by: Marc T. Shown, PE

DOCUMENT NOT CONSIDERED FINAL UNLESS ALL SIGNATURES COMPLETED

-L-
PI Sta 13+15.52
Δ = 48° 05' 27.8" (LT)
D = 67° 24' 24.5"
L = 71.37'
T = 37.90'
R = 85.00'

NC GRID
NAD 83 NA 2011

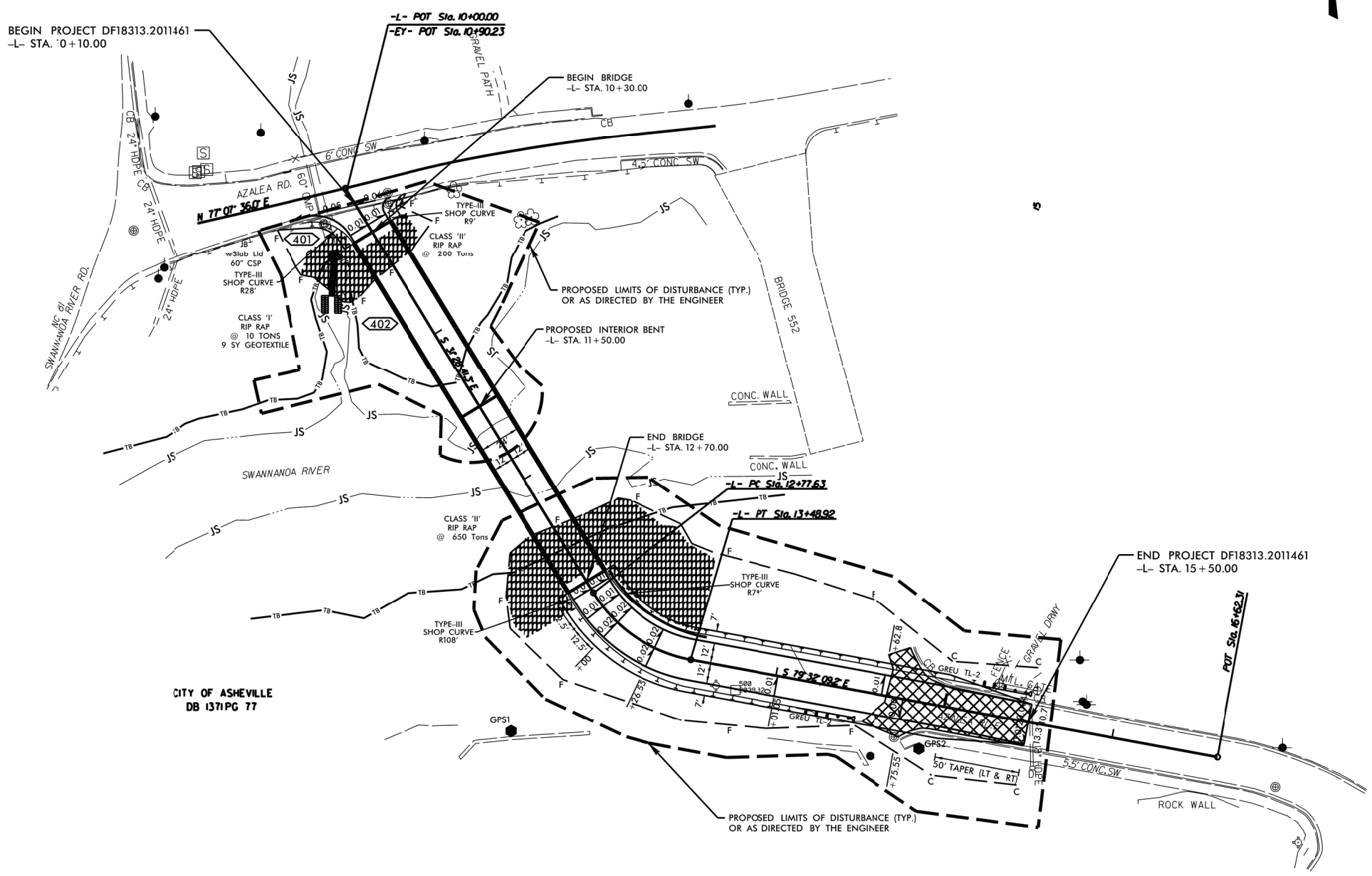

PAVEMENT REMOVAL

40 20 0 40 80

SEE SHEET 5 FOR -L- PROFILE

REVISIONS

8/17/99

15-JUN-2026 11:18
S:\DOT\Projects\Buncombe\Azalea Rd Bridge 552 Gashes Creek_DF18313.2011461\Roadway\Proj\AzaleaRdBridge552_ddc_psh.dgn
$$$$USERNAME$$$$

PROJECT REFERENCE NO.	SHEET NO.
DF18313.2011461	5
ROADWAY DESIGN ENGINEER	HYDRAULICS ENGINEER
SEAL 041993 William C. Carver 06/17/2026	SEAL 020870 Marc T. Shown, PE

DOCUMENT NOT CONSIDERED FINAL UNLESS ALL SIGNATURES COMPLETED

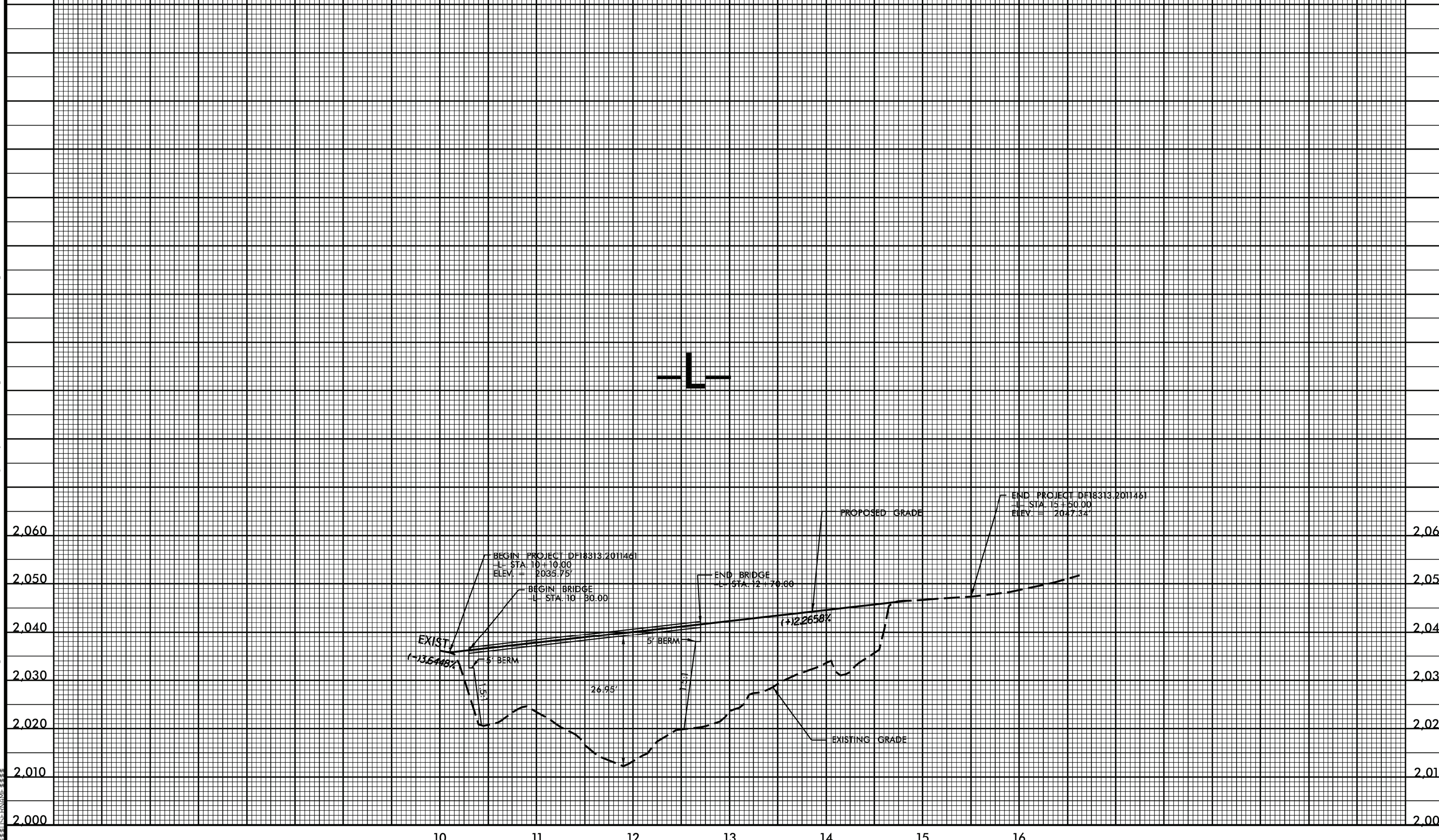

5/14/99

16-JUN-2026 11:21
S:\DDC\Projects\Buncombe\Azalea Rd Bridge 552_Gashes Creek_DF18313.2011461\Roadway\Proj\AzaleaRdBridge552_ddc_pf1_sheet_L.dgn
$$$$USERNAME$$$$

SURVEY CONTROL SHEET

PROJECT REFERENCE NO.	SHEET NO.
DF18313.2011461	RW01
R/W SHEET NO.	
ROADWAY DESIGN ENGINEER	HYDRAULICS ENGINEER

DOCUMENT NOT CONSIDERED FINAL UNLESS ALL SIGNATURES COMPLETED

N
NC GRID
NAD 83 NA 2011

BL

POINT	DESC.	NORTH	EAST	ELEVATION
GPS1	IRON PIN & CAP	684744.8940	961372.8820	2033.607
GPS2	IRON PIN & CAP	684734.6430	961611.9220	2046.561

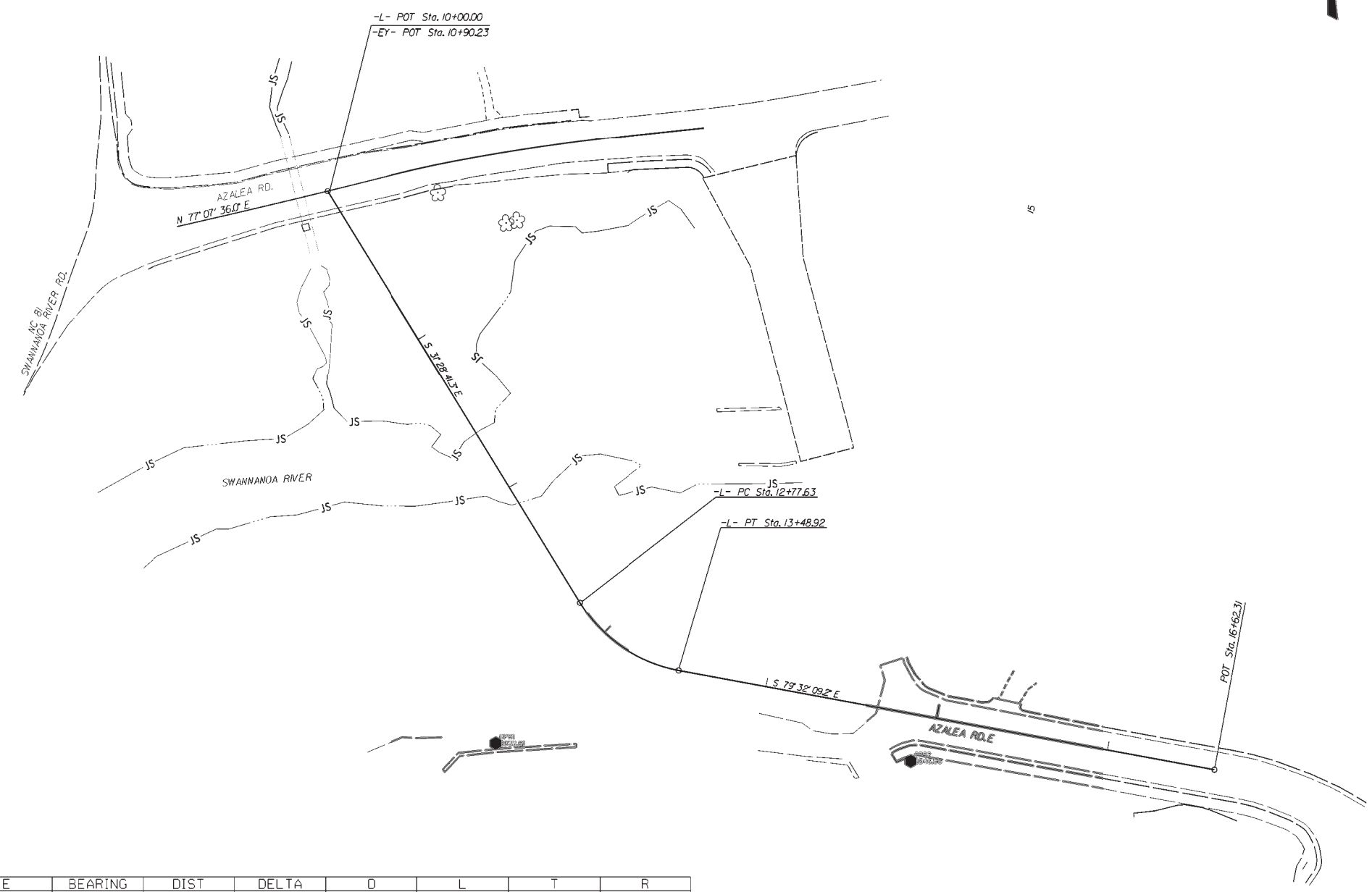

LNEW

POINT	N	E	BEARING	DIST	DELTA	D	L	T	R
POT	685062.619	961276.137							
LINE			S 31°28'41.3" E	277.63					
PC	684825.850	961421.125							
CURVE			S 55°30'25.3" E	69.22	48°03'27.8"(LT)	67°24'24.5"	71.30	37.90	85.00
PT	684786.648	961478.159							
LINE			S 79°32'09.2" E	313.39					
POT	684723.730	961786.338							

EY

POINT	N	E	BEARING	DIST	DELTA	D	L	T	R
POT	685042.212	961189.710							
LINE			N 77°07'36.0" E	5.69					
PC	685043.479	961195.253							
CURVE			N 76°26'38.4" E	122.58	01°21'55.1"(LT)	01°06'49.5"	122.59	61.30	5144.44
PCC	685072.212	961314.422							
CURVE			N 77°28'57.0" E	35.09	03°26'32.3"(RT)	09°48'34.3"	35.09	17.55	584.08
PCC	685079.816	961348.674							
CURVE			N 81°38'42.5" E	102.45	04°52'58.6"(RT)	04°45'53.3"	102.48	51.27	1202.48
PCC	685094.703	961450.035							
CURVE			N 83°56'24.0" E	42.78	00°17'35.5"(LT)	02°41'07.1"	42.78	21.39	3360.77
PT	685099.219	961492.578							

NOTES:

1. PROJECT CONTROL WAS ESTABLISHED USING GNSS, THE GLOBAL NAVIGATION SATELLITE SYSTEM.

2. THE SURVEY CONTROL DATA FOR THIS PROJECT HAS BEEN COMPILED FROM VARIOUS SOURCES. IF FURTHER INFORMATION REGARDING PROJECT CONTROL IS NEEDED, PLEASE CONTACT THE DDC UNIT.

40 20 0 40 80

REVISIONS

8/17/99

TIP NO.	SHEET NO.
DF18313.2011461	PMP/SIGN-1

APPROVED: William C Carver
DATE: 06/17/2026
SEAL

STATE OF NORTH CAROLINA
DIVISION OF HIGHWAYS

PAVEMENT MARKING AND SIGNING PLAN BUNCOMBE COUNTY

ROADWAY STANDARD DRAWINGS

THE FOLLOWING ROADWAY STANDARDS AS APPEAR IN "ROADWAY STANDARD DRAWINGS" PROJECT SERVICES UNIT - N.C. DEPARTMENT OF TRANSPORTATION - RALEIGH, N.C., DATE JANUARY 2024 ARE APPLICABLE TO THIS PROJECT AND BY REFERENCE HEREBY ARE CONSIDERED A PART OF THESE PLANS:

STD. NO.	TITLE
904.10	ORIENTATION OF GROUND MOUNTED SIGNS
904.50	MOUNTING OF SIGN TYPE 'D','E', SND 'F' SIGN ON 'U' CHANNEL POSTS
1205.01	PAVEMENT MARKINGS - LINE TYPES AND OFFSETS
1205.02	PAVEMENT MARKINGS - TWO-LANE AND MULTILANE ROADS
1205.04	PAVEMENT MARKINGS - INTERSECTIONS
1205.08	PAVEMENT MARKINGS - SYMBOLS AND WORD MESSAGES

INDEX

SHEET NO.	DESCRIPTION
PMP/SIGN-1	PAVEMENT MARKING AND SIGNING PLAN TITLE, INDEX OF SHEETS, LIST OF APPLICABLE ROADWAY STANDARD DRAWINGS, GENERAL NOTES, AND FINAL PAVEMENT MARKING SCHEDULE
PMP/SIGN-2	PAVEMENT MARKING AND SIGNING PLAN

SUMMARY OF QUANTITIES

ITEM NO.		ITEM DESCRIPTION	QUANTITY	UNIT
DESC. NO.	SECT. NO.			
4025000000-E	901	CONTRACTOR FURNISHED, TYPE E SIGN	52.25	SF
4072000000-E	903	SUPPORTS, 3LB U-CHANNEL	82.1	LF
4102000000-N	904	SIGN ERECTION, TYPE E	6	EA
7636000000-N	1745	SIGN FOR SIGNAL	1	EA

GENERAL NOTES

THE FOLLOWING GENERAL NOTES APPLY AT ALL TIMES FOR THE DURATION OF THE CONSTRUCTION PROJECT, EXCEPT WHEN OTHERWISE NOTED IN THE PLAN, OR DIRECTED BY THE ENGINEER.

PAVEMENT MARKINGS

A) INSTALL PAVEMENT MARKINGS AND PAVEMENT MARKERS ON THE FINAL SURFACE AS FOLLOWS:

ROAD NAME	MARKING	MARKER
AZALEA ROAD E (-L-)	THERMOPLASTIC	NONE

USE THEROMPLASTICS FOR STOP BARS, SYMBOLS, CHARACTERS, AND DIAGONALS ALL ROADS.

B) TIE PROPOSED PAVEMENT MARKINGS LINES TO EXISTING PAVEMENT MARKING LINES.

C) REMOVE/REPLACE ANY CONFLICTING/DAMAGED PAVEMENT MARKINGS AND MARKERS.

D) STOP BAR LOCATION AT NON-SIGNALIZED INTERSECTIONS MAY BE ADJUSTED AS DIRECTED BY THE ENGINEER.

E) UNLESS OTHERWISE SPECIFIED, HEATED-IN-PLACE THERMOPLASTIC MAY BE USED IN LIEU OF EXTRUDED THERMOPLASTIC FOR STOP BARS, SYMBOLS, CHARACTERS, AND DIAGONALS. IF HEATED-IN-PLACED IS USED, IT SHALL BE PAID FOR USING THE EXTRUDED THERMOPLASTIC PAY ITEM.

F)SIGNS FURNISHED BY THE CONTRACTOR.

G) ALL TYPE 'E' SIGNS SHALL BE MOUNTED ON ONE U-CHANNEL POST UNLESS OTHERWISE INDICATED ON THE PLANS.

H)WHEN NOT STATIOND OR DIMENSIONED ON THE PLANS, ALL TYPE 'E' ANE 'F' SIGNS SHALL BE LOCATED BY THE ENGINEER.

I)WHEN EXISTING SIGNS ARE REMOVED AND INSTALLED ON NEW SUPPORTS, THE RE-ERECTION SHALL IMMEDIATELY FOLLOW THE REMOVAL.

J)THE BACKGROUND FOR THE TYPE 'E' SIGNS SHALL BE TYPE C REFLECTIVE **SHEETING.**

FINAL PAVEMENT MARKING SCHEDULE

PAVEMENT MARKINGS

THERMOPLASTICS (24", 90 MILS)

T61	WHITE STOP

THERMO (4", 90MILS)

T1	WHITE EDGELINE
T2	WHITE LANE LINE
T5	2'-6'/SP WHITE MINI SKIP

THERMO (6", 90MILS)

T33	YELLOW DOUBLE CENTER

PAVEMENT MARKINGS

THERMOPLASTIC PAVEMENT MARKING SYMBOLS (90 MILS)

~~T71~~	~~RIGHT ARROW~~
T72	STRAIGHT ARROW
T73	LEFT ARROW
T75	COMBO LEFT RIGHT ARROW

27-MAY-2026 14:21
S:\DC_...\Buncombe\Azalea Rd Bridge 552_Gashes Creek_DF18313.2011461\Traffic\TrafficControl\AzaleaRdBridge552_cdc_PMP_.dgn

TIP NO.	SHEET NO.
DFI8313.2011461	PMPSIGN-2

APPROVED: William C Carver

DATE: 06/17/2026

SEAL

NORTH CAROLINA PROFESSIONAL SEAL 041993 ENGINEER WILLIAM C. CARVER

DOCUMENT NOT CONSIDERED FINAL UNLESS ALL SIGNATURES COMPLETED

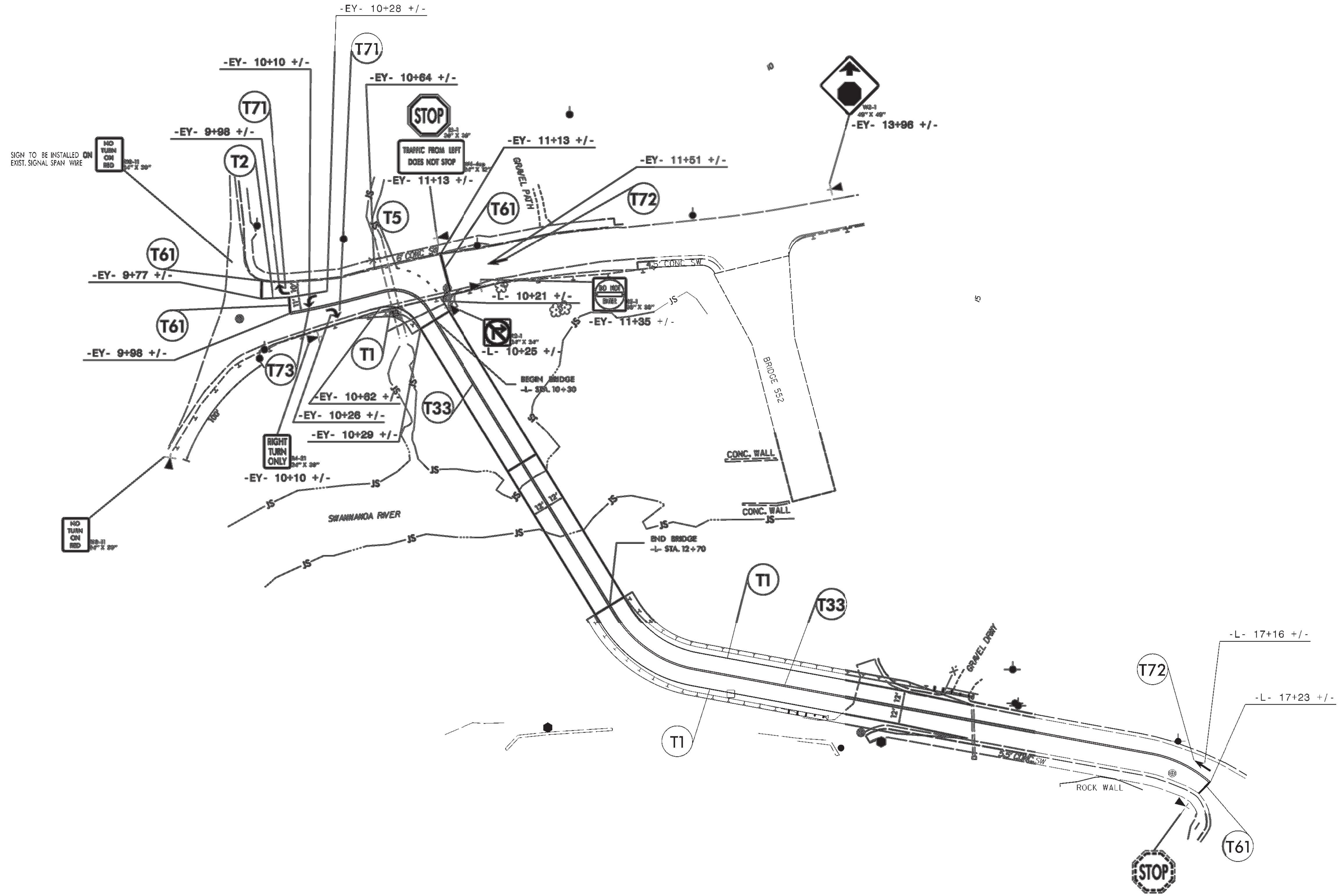

PROJECT NOTES

- SEE SHEET SIGN/PMP-1 FOR FINAL **PAVEMENT MARKING** SCHEDULE
- TURN ARROW SYMBOLS SHOULD BE **PLACED AT 75' SPAC**ING.

NOTE: TIE PAVEMENT MARKINGS TO EXISTING.

PROJECT: DF18313.2011461

STATE	STATE PROJECT REFERENCE NO.	SHEET NO.	TOTAL SHEETS
N.C.	DF18313.2011461	EC-1	

STATE PROJ. NO.	F.A. PROJ. NO.	DESCRIPTION

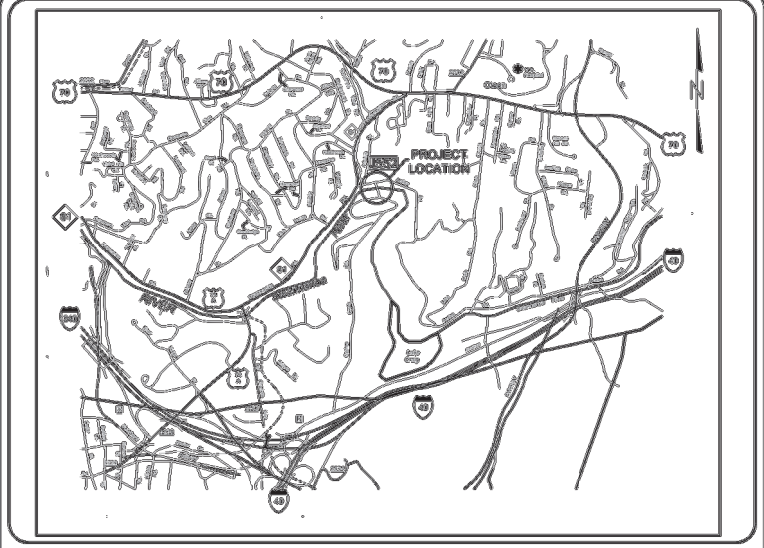

VICINITY MAP
NOT TO SCALE

STATE OF NORTH CAROLINA
DIVISION OF HIGHWAYS

PLAN FOR PROPOSED
HIGHWAY EROSION CONTROL

LOCATION: *AZALEA RD E. BETWEEN AZALEA RD. AND GASHES CREEK RD*

TYPE *OF WORK: TEMPORARY BRIDGE CONSTRUCTION, GRADING, AND PAVING*

EC–4

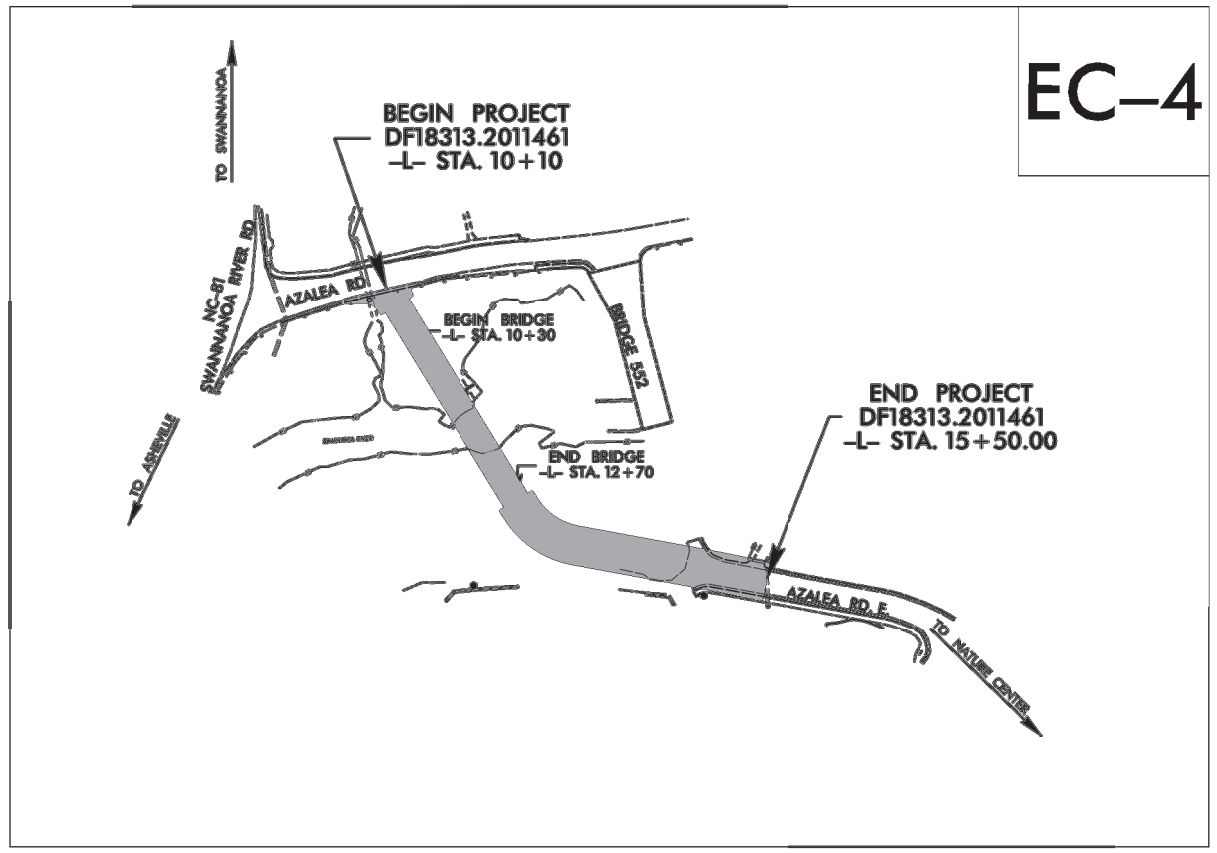

THIS PROJECT CONTAINS EROSION CONTROL PLANS FOR CLEARING AND GRUBBING PHASE OF CONSTRUCTION.

GRAPHIC SCALE

40 20 0 40 80
PLANS

THESE EROSION AND SEDIMENT CONTROL PLANS COMPLY WITH THE REGULATIONS SET FORTH BY THE NCG 010000 GENERAL STORMWATER CONSTRUCTION PERMIT ISSUED BY THE NORTH CAROLINA DEPARTMENT OF ENVIRONMENTAL QUALITY DIVISION OF ENERGY, MINERAL, AND LAND RESOURCES.

Prepared in the Office of:

DIVISION 13 DDC
55 Orange St.
Asheville, NC 28801

2024 STANDARD SPECIFICATIONS

Designed by:

Hampton Fletcher — *3382*
NAME — LEVEL III CERTIFICATION NO.

Roadway Standard Drawings

The "Roadway Standard Drawings"- Roadway Design Unit - N. C. Department of Transportation - Raleigh, N. C., dated January 2024 and the latest revision thereto are applicable to this project and by reference hereby are considered a part of these plans.

PROJECT REFERENCE NO.	SHEET NO.
DF18313.2011461	EC-02
ROADWAY DESIGN ENGINEER	HYDRAULICS ENGINEER

DIVISION OF HIGHWAYS
STATE OF NORTH CAROLINA

EROSION & SEDIMENT CONTROL LEGEND

Std. #	Description	Symbol
1605.01	Temporary Silt Fence	
1606.01	Special Sediment Control Fence	
1622.01	Temporary Berms and Slope Drains	
1630.02	Silt Basin Type B	
1630.03	Temporary Silt Ditch	TSD
1630.04	Stilling Basin	
1630.05	Temporary Diversion	TD
1630.06	Special Stilling Basin	
1630.07	Skimmer Basin	
1630.08	Tiered Skimmer Basin	
1630.09	Earthen Dam with Skimmer	
	Infiltration Basin	
	Rock Inlet Sediment Trap:	
1632.01	Type A	A
1632.02	Type B	B
1632.03	Type C	C

Std. #	Description	Symbol
1633.01	Temporary Rock Silt Check Type A	
1633.02	Temporary Rock Silt Check Type B	
1633.03	Temporary Rock Silt Check Type A with Excelsior Matting and Flocculant	
1634.01	Temporary Rock Sediment Dam Type A	
1634.02	Temporary Rock Sediment Dam Type B	
1635.01	Rock Pipe Inlet Sediment Trap Type A	A
1635.02	Rock Pipe Inlet Sediment Trap Type B	B
1636.01	Excelsior Wattle Check	
1636.01	Excelsior Wattle Check with Flocculant	
1636.01	Coir Fiber Wattle Check	
1636.01	Coir Fiber Wattle Check with Flocculant	
1636.02	Silt Fence Excelsior Wattle Break	EW
	Silt Fence Coir Fiber Wattle Break	CFW
1636.03	Excelsior Wattle Barrier	—EW—EW—EW—
1636.03	Coir Fiber Wattle Barrier	—CFW—CFW—CFW—

PROJECT REFERENCE NO.	SHEET NO.
DF18313.2011461	EC-2A
R/W SHEET NO.	
ROADWAY DESIGN ENGINEER	HYDRAULICS ENGINEER

ONSITE CONCRETE WASHOUT STRUCTURE WITH LINER

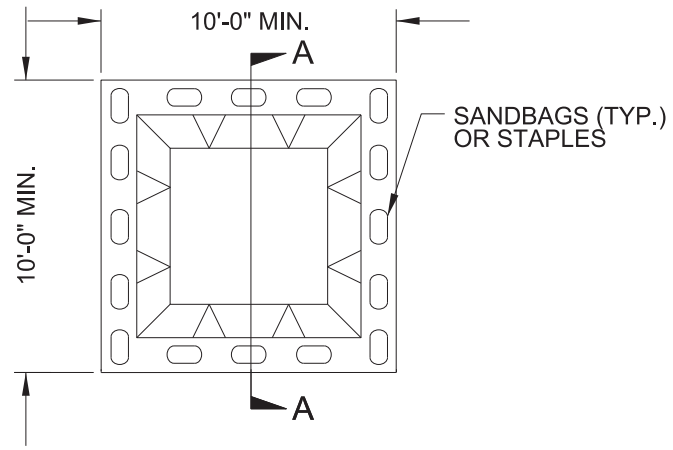

PLAN

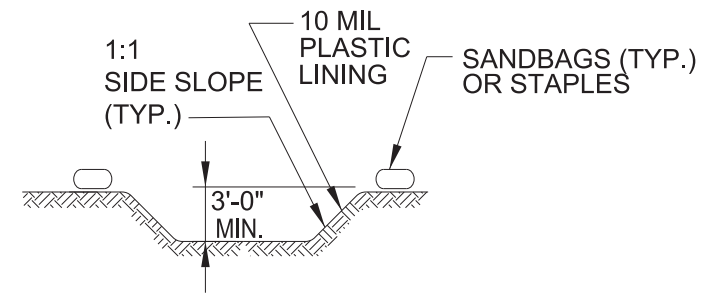

SECTION A-A

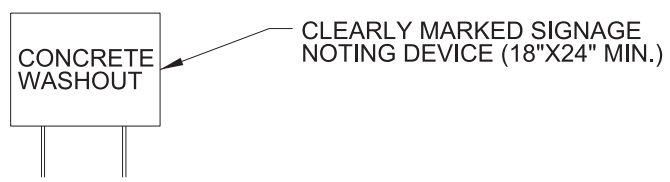

NOTES:
1. ACTUAL LOCATION DETERMINED IN FIELD

2. THE CONCRETE WASHOUT STRUCTURES SHALL BE MAINTAINED WHEN THE LIQUID AND/OR SOLID REACHES 75% OF THE STRUCTURES CAPACITY TO PROVIDE ADEQUATE HOLDING CAPACITY WITH A MINIMUM 12 INCHES OF FREEBOARD.

3.CONCRETE WASHOUT STRUCTURE NEEDS TO BE CLEARY MARKED WITH SIGNAGE NOTING DEVICE.

BELOW GRADE WASHOUT STRUCTURE

NOT TO SCALE

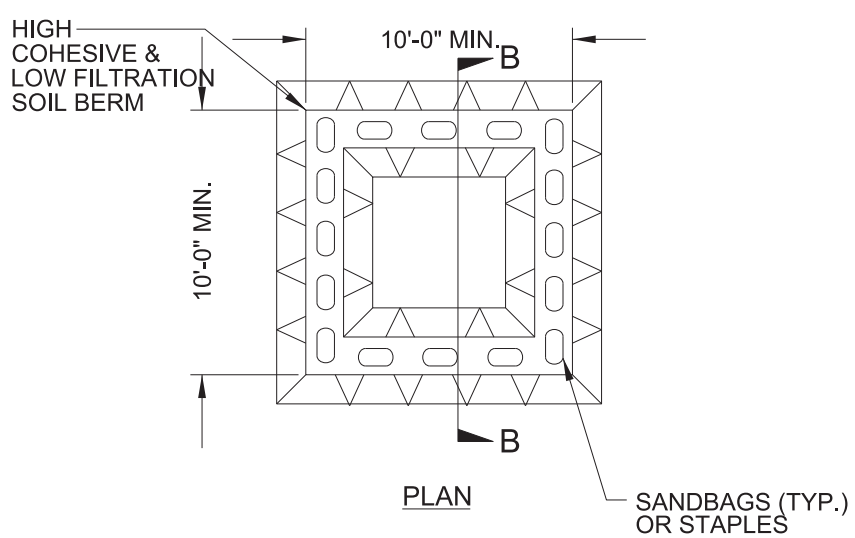

PLAN

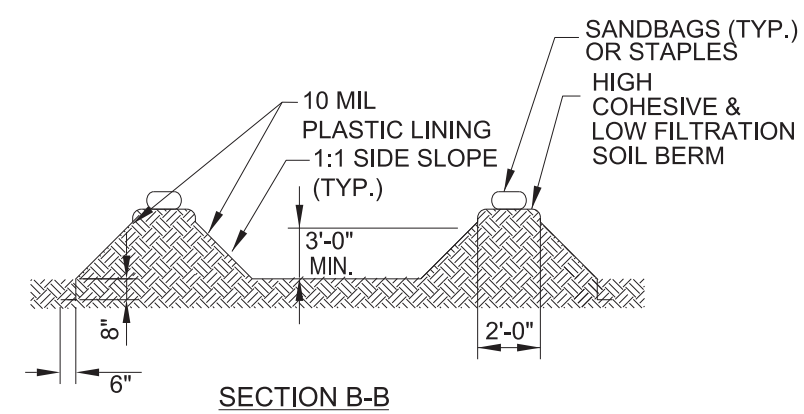

SECTION B-B

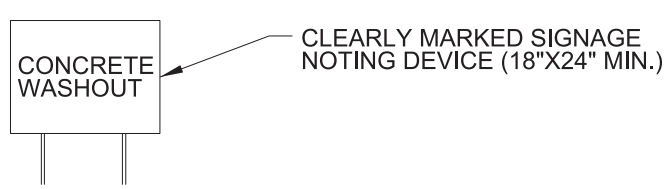

NOTES:
1. ACTUAL LOCATION DETERMINED IN FIELD

2. THE CONCRETE WASHOUT STRUCTURES SHALL BE MAINTAINED WHEN THE LIQUID AND/OR SOLID REACHES 75% OF THE STRUCTURES CAPACITY TO PROVIDE ADEQUATE HOLDING CAPACITY WITH A MINIMUM 12 INCHES OF FREEBOARD.

3.CONCRETE WASHOUT STRUCTURE NEEDS TO BE CLEARY MARKED WITH SIGNAGE NOTING DEVICE.

ABOVE GRADE WASHOUT STRUCTURE

NOT TO SCALE

PROJECT REFERENCE NO.	SHEET NO.
DF18313.2011461	EC-2B
R/W SHEET NO.	
ROADWAY DESIGN ENGINEER	HYDRAULICS ENGINEER

SILT FENCE COIR FIBER WATTLE BREAK DETAIL

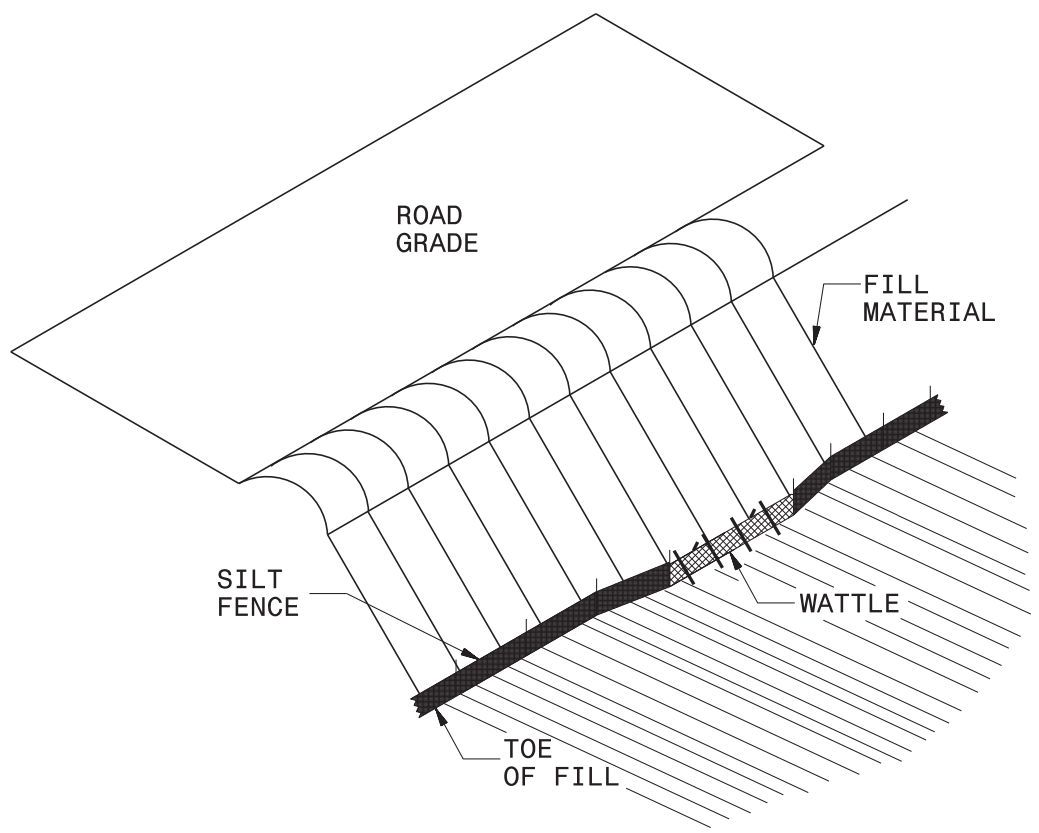

ISOMETRIC VIEW

NOTES:

USE MINIMUM 12 IN. DIAMETER COIR FIBER (COCONUT FIBER) WATTLE AND LENGTH OF 10 FT.

EXCAVATE A 1 TO 2 INCH TRENCH FOR WATTLE TO BE PLACED.

DO NOT PLACE WATTLE ON TOE OF SLOPE.

USE 2 FT. WOODEN STAKES WITH A 2 IN. BY 2 IN. NOMINAL CROSS SECTION.

INSTALL A MINIMUM OF 2 UPSLOPE STAKES AND 4 DOWNSLOPE STAKES AT AN ANGLE TO WEDGE WATTLE TO GROUND.

PROVIDE STAPLES MADE OF 11 GUAGE STEEL WIRE FORMED INTO A U SHAPE NOT LESS THAN 6″ IN LENGTH.

INSTALL STAPLES APPROXIMATELY EVERY 1 LINEAR FOOT ON BOTH SIDES OF WATTLE AND AT EACH END TO SECURE IT TO THE SOIL.

WATTLE INSTALLATION CAN BE ON OUTSIDE OF THE SILT FENCE AS DIRECTED.

INSTALL TEMPORARY SILT FENCE IN ACCORDANCE WITH SECTION 1605 OF THE STANDARD SPECIFICATIONS.

INSET A

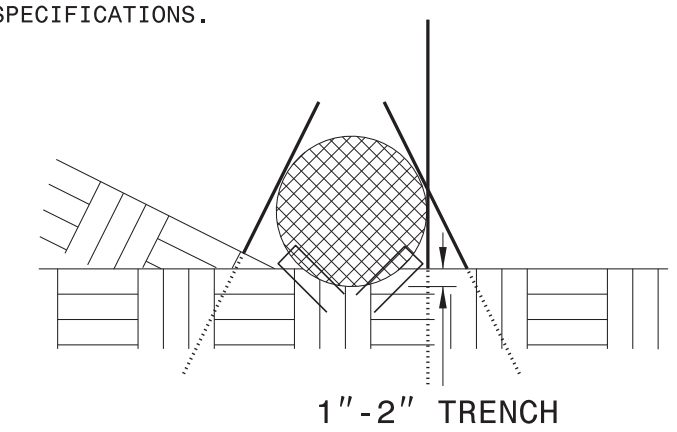

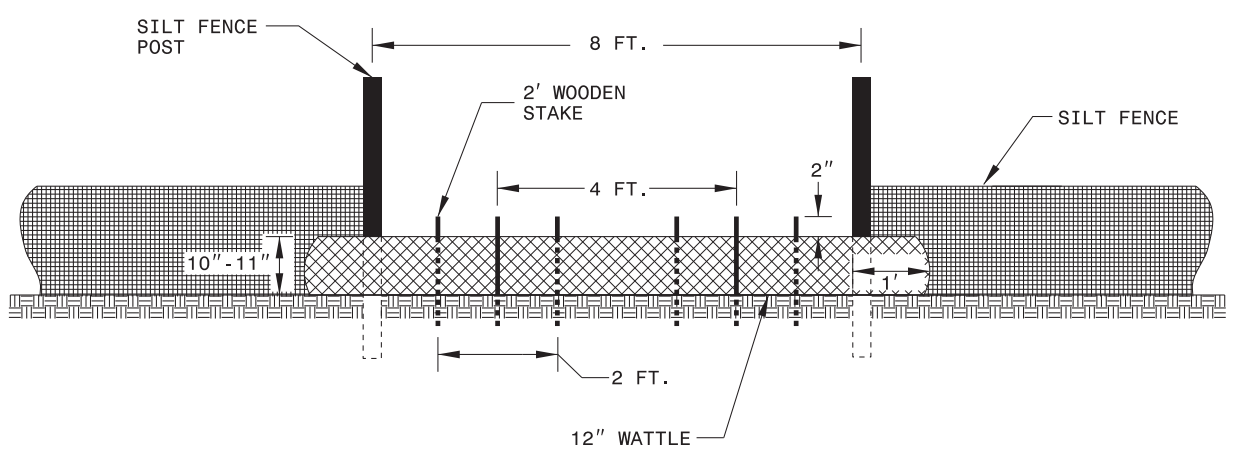

VIEW FROM SLOPE

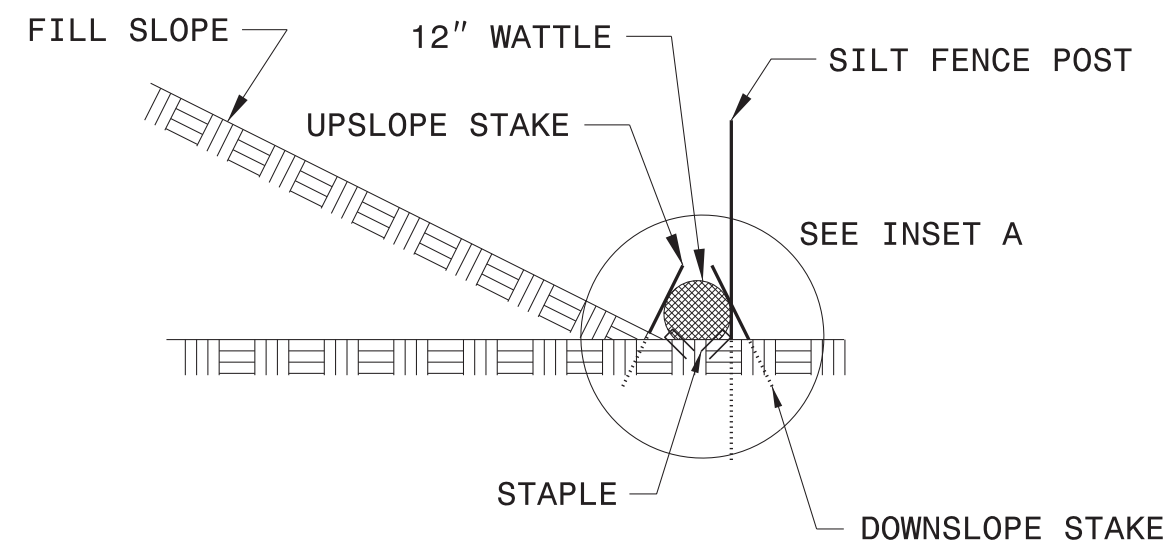

SIDE VIEW

PROJECT REFERENCE NO.	SHEET NO.
DF18313.2011461	EC-2E
R/W SHEET NO.	
ROADWAY DESIGN ENGINEER	HYDRAULICS ENGINEER

EXAMPLE OF PUMP–AROUND OPERATION

NOTES:
1) All excavation shall be performed in only dry or isolated areas of the work zone.
2) Impervious dikes are to be used to isolate work from stream flow when necessary.
3) Maintenance of stream flow operations shall be incidental to the work. This includes polyethylene sheeting, diversion pipes, pumps and hoses.
4) Pumps and hoses shall be of sufficient size and quantity to dewater the work area and maintain stream bypass flow.

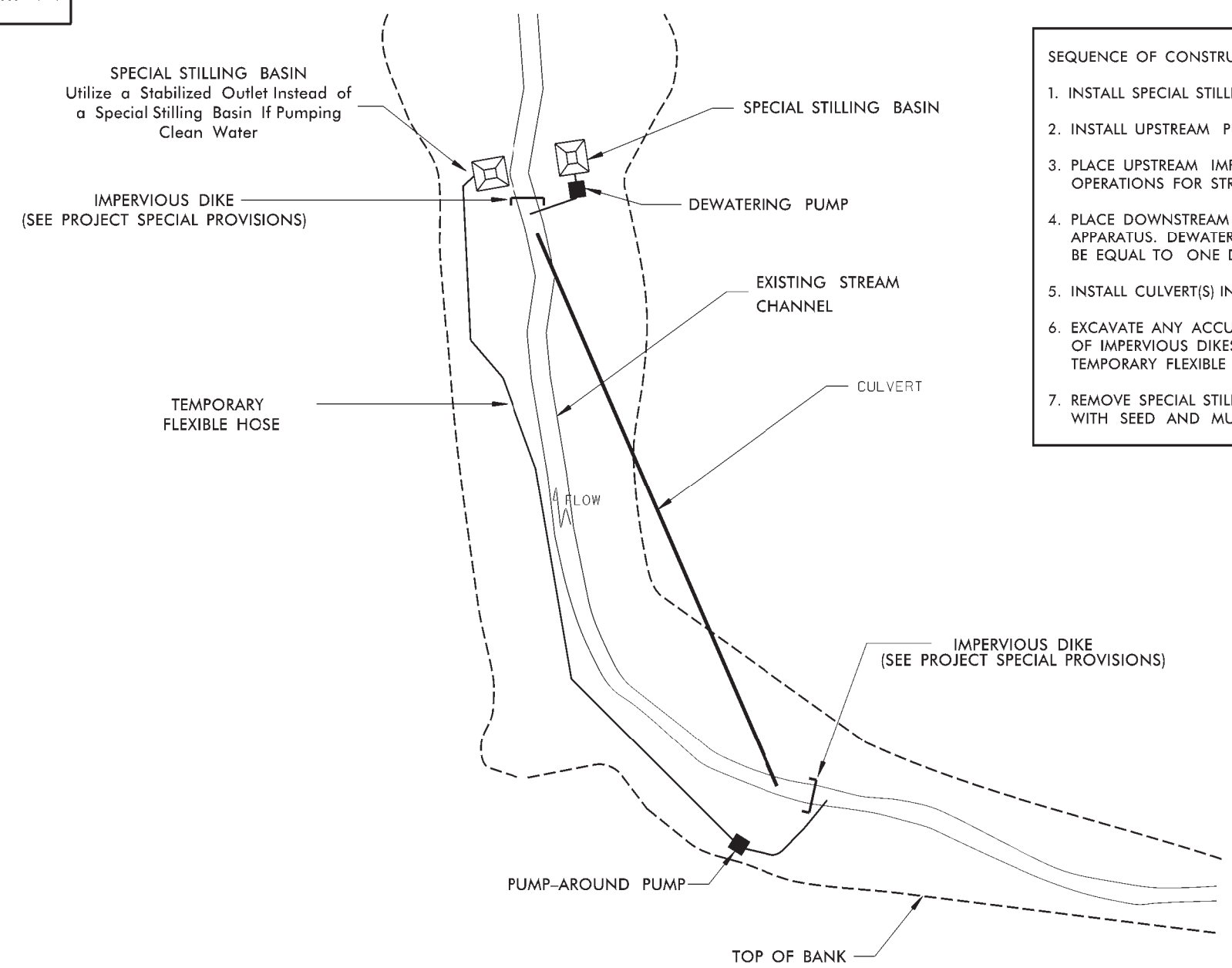

SEQUENCE OF CONSTRUCTION FOR TYPICAL WORK AREA

1. INSTALL SPECIAL STILLING BASIN(S).
2. INSTALL UPSTREAM PUMP AND TEMPORARY FLEXIBLE HOSE.
3. PLACE UPSTREAM IMPERVIOUS DIKE AND BEGIN PUMPING OPERATIONS FOR STREAM DIVERSION.
4. PLACE DOWNSTREAM IMPERVIOUS DIKE AND PUMPING APPARATUS. DEWATER ENTRAPPED AREA. AREA TO BE DEWATERED SHALL BE EQUAL TO ONE DAY'S WORK.
5. INSTALL CULVERT(S) IN ACCORDANCE WITH THE PLANS.
6. EXCAVATE ANY ACCUMULATED SILT AND DEWATER BEFORE REMOVAL OF IMPERVIOUS DIKES. REMOVE IMPERVIOUS DIKES, PUMPS, AND TEMPORARY FLEXIBLE HOSE. (DOWNSTREAM IMPERVIOUS DIKES FIRST).
7. REMOVE SPECIAL STILLING BASIN(S) AND BACKFILL. STABILIZE DISTURBED AREA WITH SEED AND MULCH.

PROJECT REFERENCE NO.	SHEET NO.
DF18313.2011461	EC-3
ROADWAY DESIGN ENGINEER	HYDRAULICS ENGINEER

DIVISION OF HIGHWAYS
STATE OF NORTH CAROLINA

SOIL STABILIZATION TIMEFRAMES

SITE DESCRIPTION	STABILIZATION TIME	TIMEFRAME EXCEPTIONS
PERIMETER DIKES, SWALES, DITCHES AND SLOPES	7 DAYS	NONE
HIGH QUALITY WATER (HQW) ZONES	7 DAYS	NONE
SLOPES STEEPER THAN 3:1	7 DAYS	IF SLOPES ARE 10' OR LESS IN LENGTH AND ARE NOT STEEPER THAN 2:1, 14 DAYS ARE ALLOWED.
SLOPES 3:1 OR FLATTER	14 DAYS	7 DAYS FOR SLOPES GREATER THAN 50' IN LENGTH.
ALL OTHER AREAS WITH SLOPES FLATTER THAN 4:1	14 DAYS	NONE, EXCEPT FOR PERIMETERS AND HQW ZONES.

PROJECT REFERENCE NO.	SHEET NO.
DF18313.2011461	EC-3A
ROADWAY DESIGN ENGINEER	HYDRAULICS ENGINEER

DIVISION OF HIGHWAYS
STATE OF NORTH CAROLINA

SOIL STABILIZATION SUMMARY SHEET

MATTING FOR EROSION CONTROL

CONST SHEET NO.	LINE	FROM STATION	TO STATION	SIDE	ESTIMATE (SY)
4	-L-	10+10	11+60	LT	326
4	-L-	10+10	11+60	RT	683
4	-L-	12+10	15+50	LT	1459
4	-L-	12+10	15+50	RT	1964
				SUBTOTAL	4432
MISCELLANEOUS MATTING TO BE INSTALLED AS DIRECTED BY THE ENGINEER					100
				TOTAL	4532
				SAY	4600

MATTING FOR EROSION CONTROL

CONST SHEET NO.	LINE	FROM STATION	TO STATION	SIDE	ESTIMATE (SY)

PROJECT REFERENCE NO.	SHEET NO.
DF18313.2011461	EC-4
RW SHEET NO.	
ROADWAY DESIGN ENGINEER	HYDRAULICS ENGINEER

DOCUMENT NOT CONSIDERED FINAL UNLESS ALL SIGNATURES COMPLETED

PHASE 1

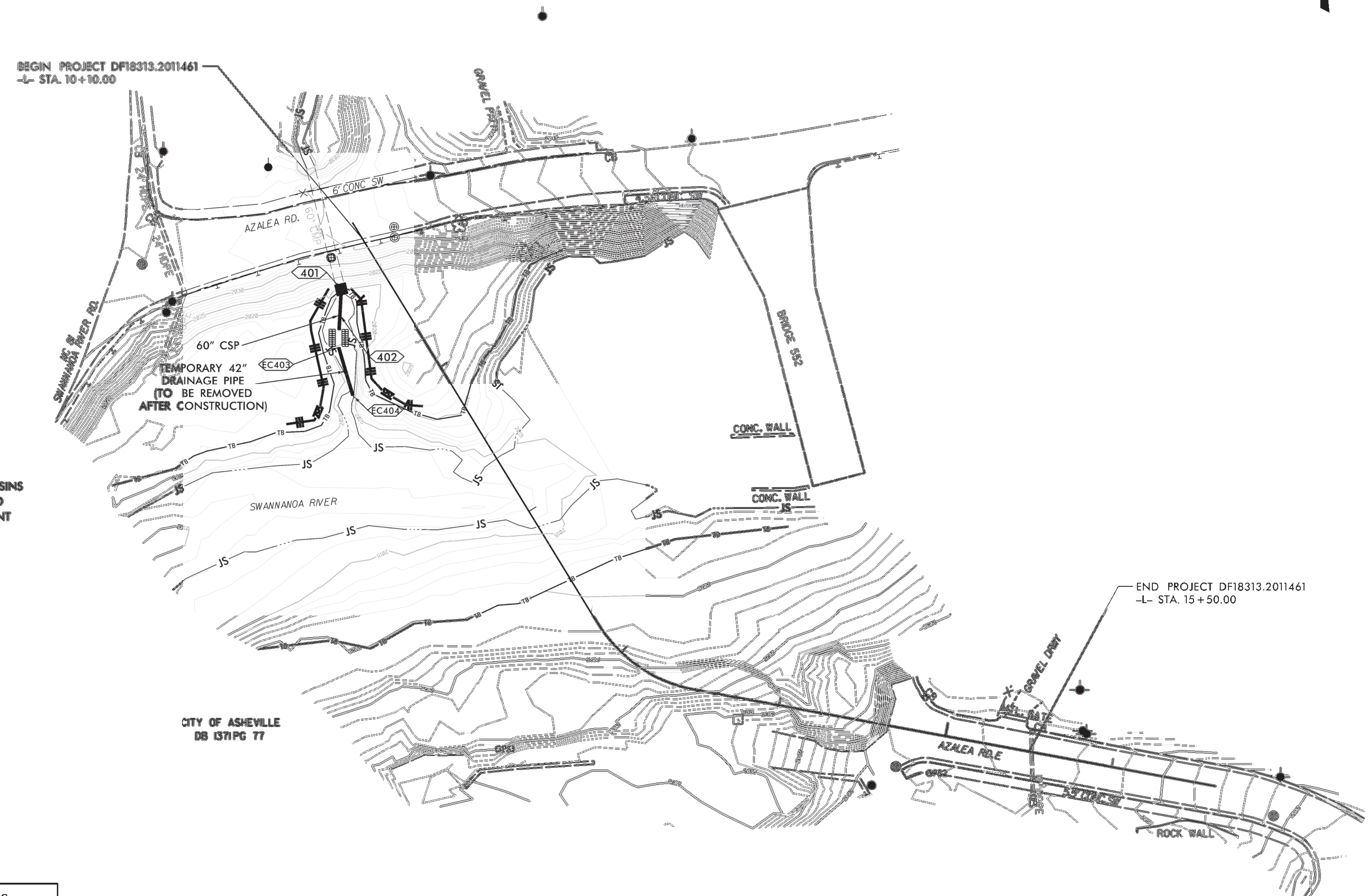

UTILIZE SPECIAL STILLING BASINS FOR PUMP AROUND AND TEMPORARY PIPE PLACEMENT

CLEARING AND GRUBBING EROSION CONTROL FOR CONSTRUCTION SHEET 4

SEE SHEET 5 FOR -L- PROFILE

REVISIONS

8/17/99

PROJECT REFERENCE NO.	SHEET NO.
DF18313.2011461	EC-5
R/W SHEET NO.	
ROADWAY DESIGN ENGINEER	HYDRAULICS ENGINEER

DOCUMENT NOT CONSIDERED FINAL UNLESS ALL SIGNATURES COMPLETED

PHASE 2

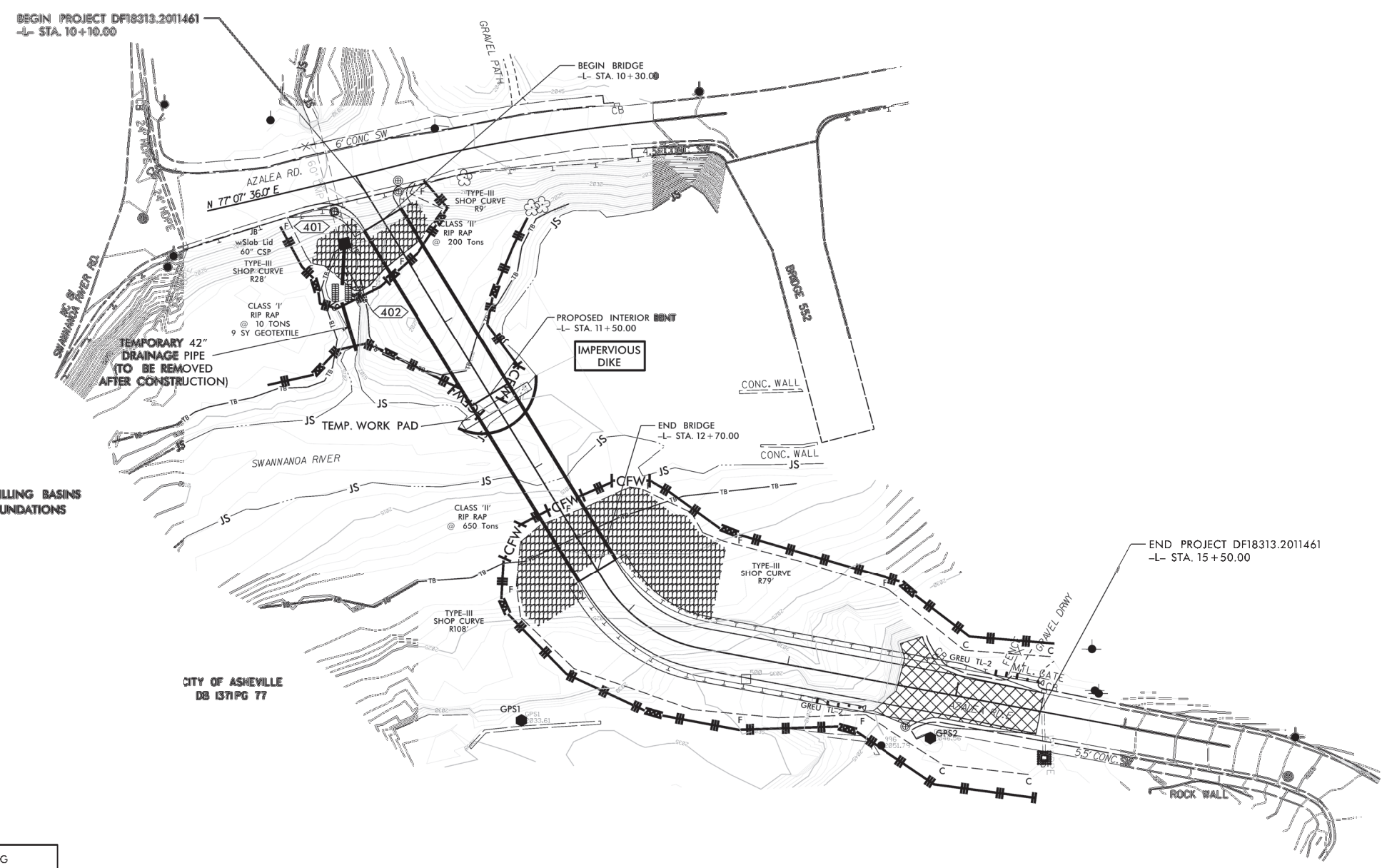

CLEARING AND GRUBBING
EROSION CONTROL FOR
CONSTRUCTION SHEET 4

PAVEMENT REMOVAL

SEE SHEET 5 FOR -L- PROFILE

REVISIONS

8/27/99

PROJECT REFERENCE NO.	SHEET NO.
DF18313.2011461	X-1

STATE OF NORTH CAROLINA
DIVISION OF HIGHWAYS

CROSS SECTION INDEX OF SHEETS		
	CROSS–SECTION SUMMARY	X–1A
–L–	10+10.00 TO 15+50.00	X–2 THRU X–9

5/28/99

$$$$$$SYSTIME$$$$$
$$$$$$$$$$$$$$$$DGN$$$$$$$$$$$$$$$$
$$$$USERNAME$$$$

PROJ. REFERENCE NO.	SHEET NO.
DF18313.2011461	X-1A

STATE OF NORTH CAROLINA
DIVISION OF HIGHWAYS

NOTE: EMBANKMENT COLUMN INCLUDES BACKFILL FOR UNDERCUT

CROSS-SECTION SUMMARY

Station Y	Uncl. Exc. (cu. yd.)	Embt (cu. yd.)
10+10.00	0	0
10+25.00	0	113
10+30 (BEGIN BRIDGE)	0	38
11+50.00	0	0
11+00.00	0	0
11+50.00	0	0
12+00.00	0	0
12+50.00	0	0
12+70.00 (END BRIDGE)	0	7314
13+00.00	0	1664
13+50.00	0	2214
14+00.00	0	1716
14+50.00	0	1197
15+00.00	17	446
15+50.00	35	0

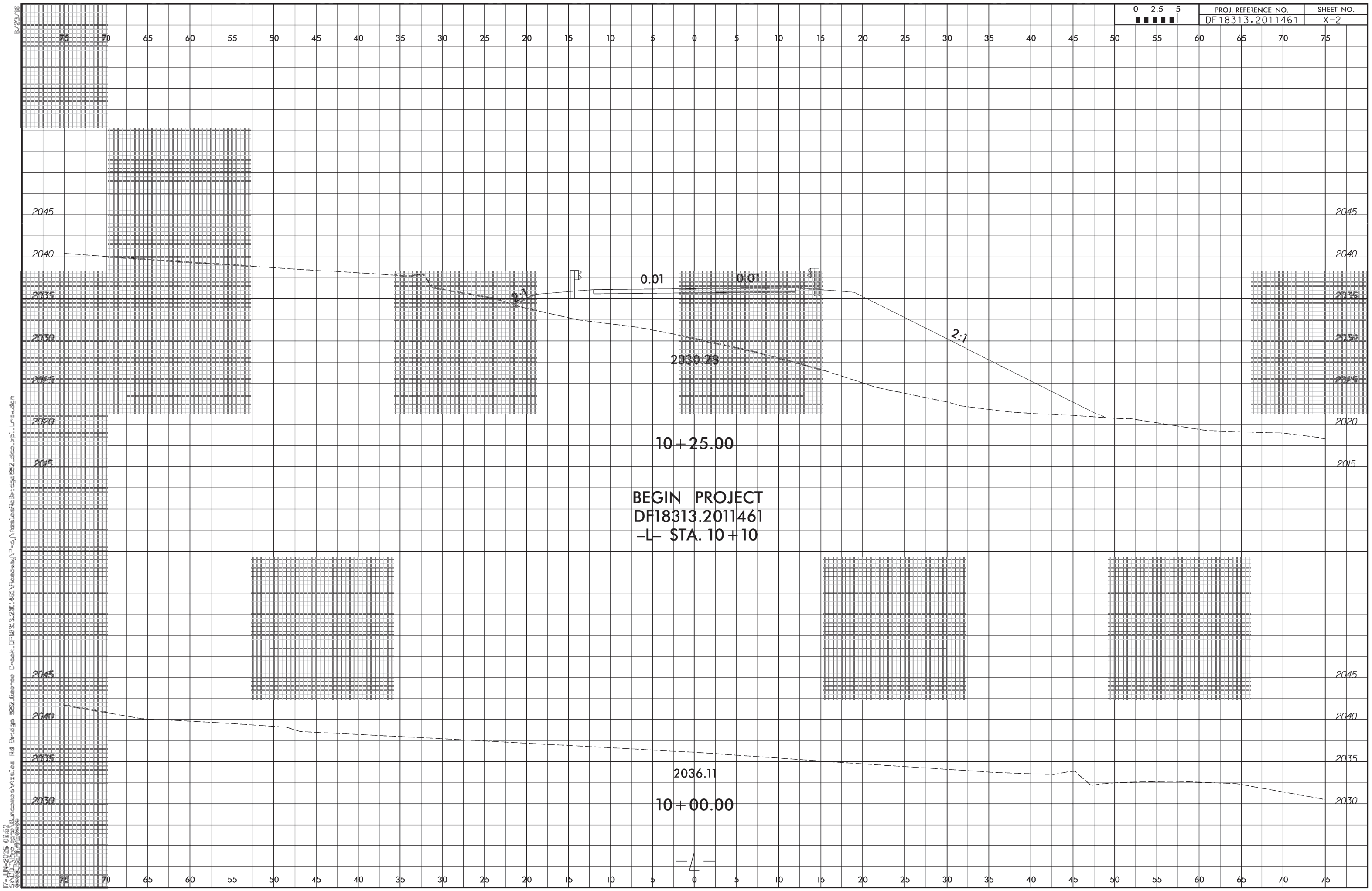
0 2.5 5
PROJ. REFERENCE NO.
DF18313.2011461
SHEET NO.
X-2
0.01
0.01
2:1
2:1
2030.28
10+25.00
BEGIN PROJECT
DF18313.2011461
-L- STA. 10+10
2036.11
10+00.00
-L-

PROJ. REFERENCE NO.	SHEET NO.
DF18313.2011461	X-3

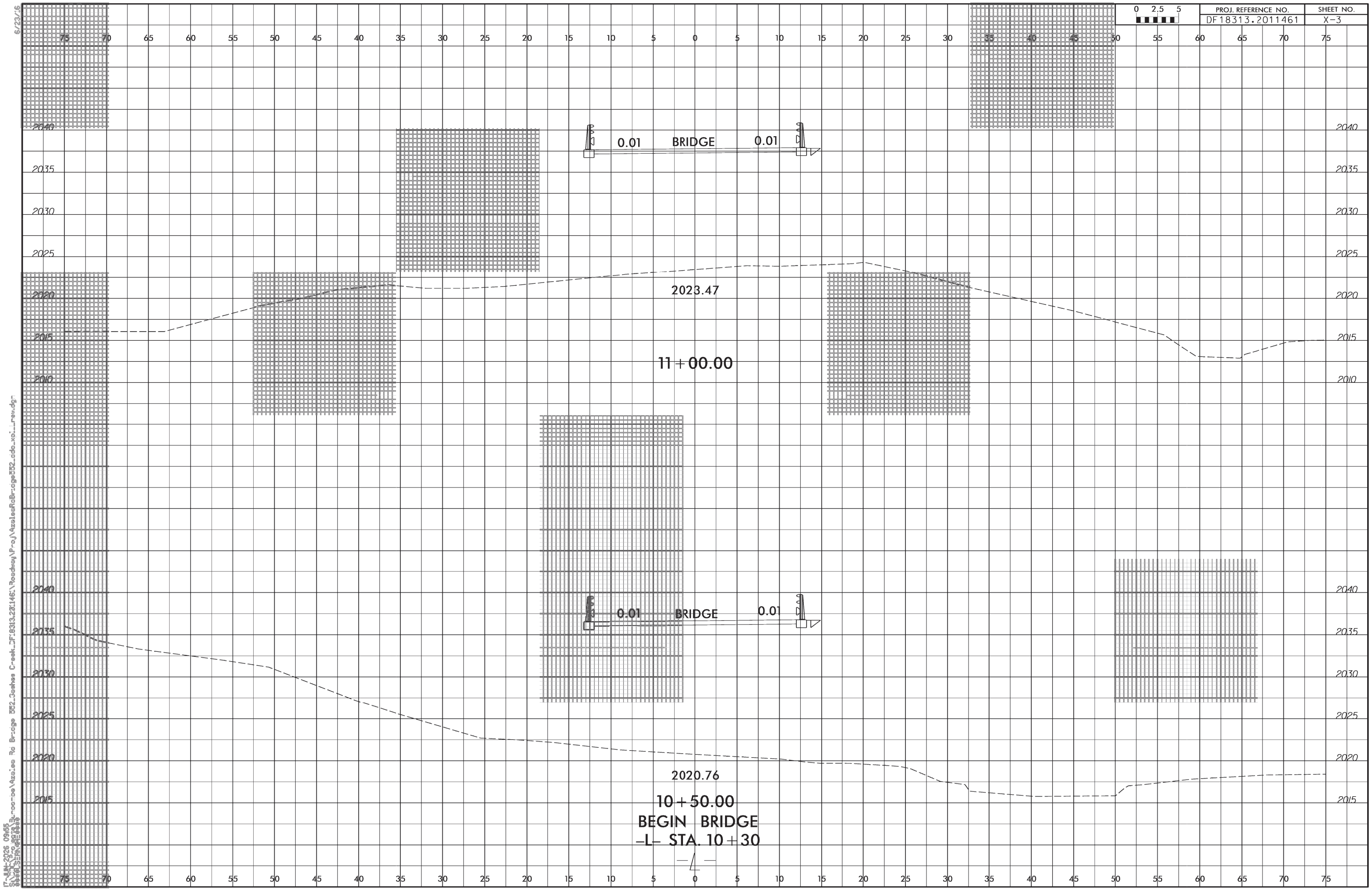

6/23/16

PROJ. REFERENCE NO.	SHEET NO.
DF18313.2011461	X-4

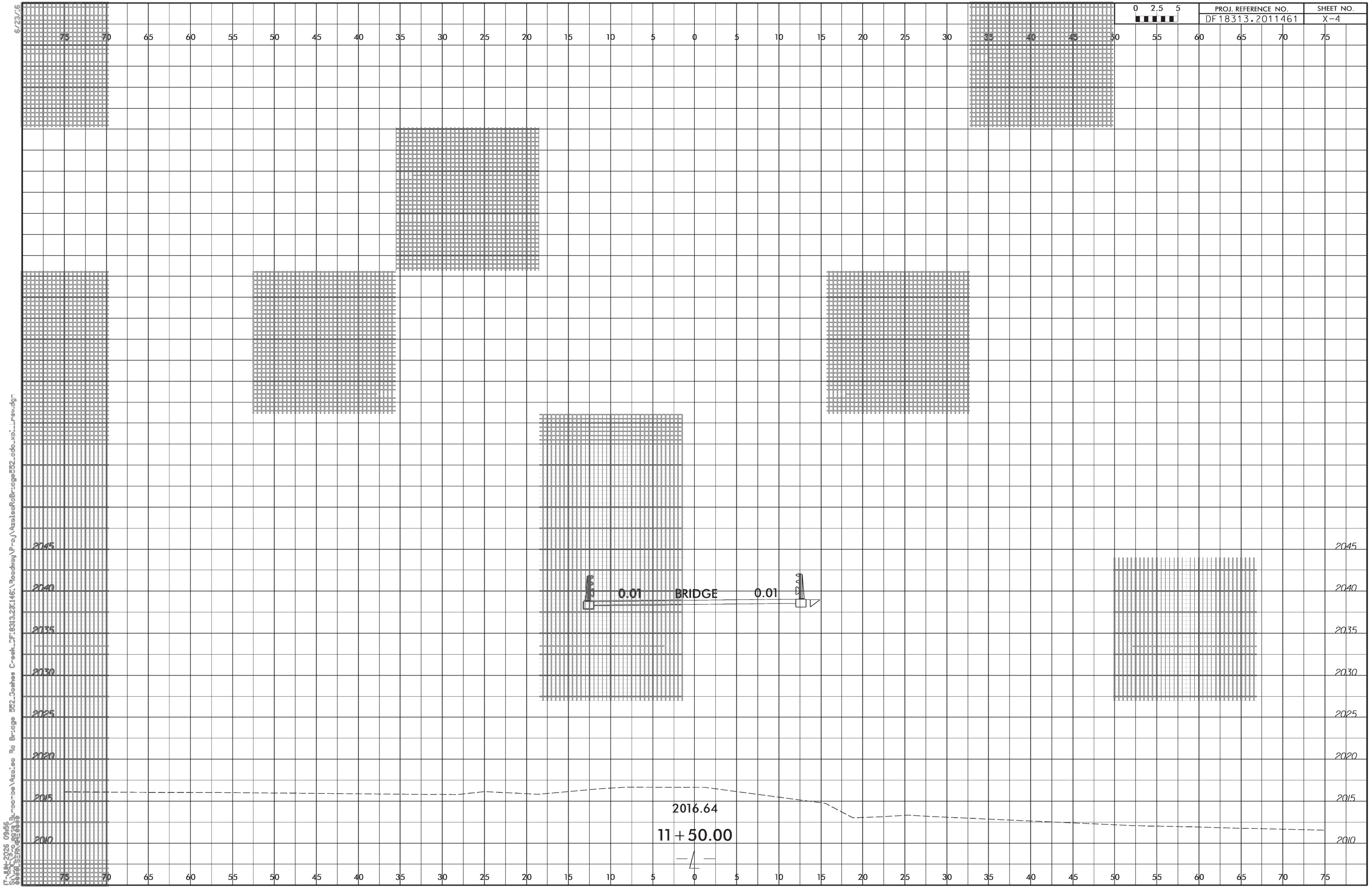

PROJ. REFERENCE NO.	SHEET NO.
DF18313.2011461	X-5

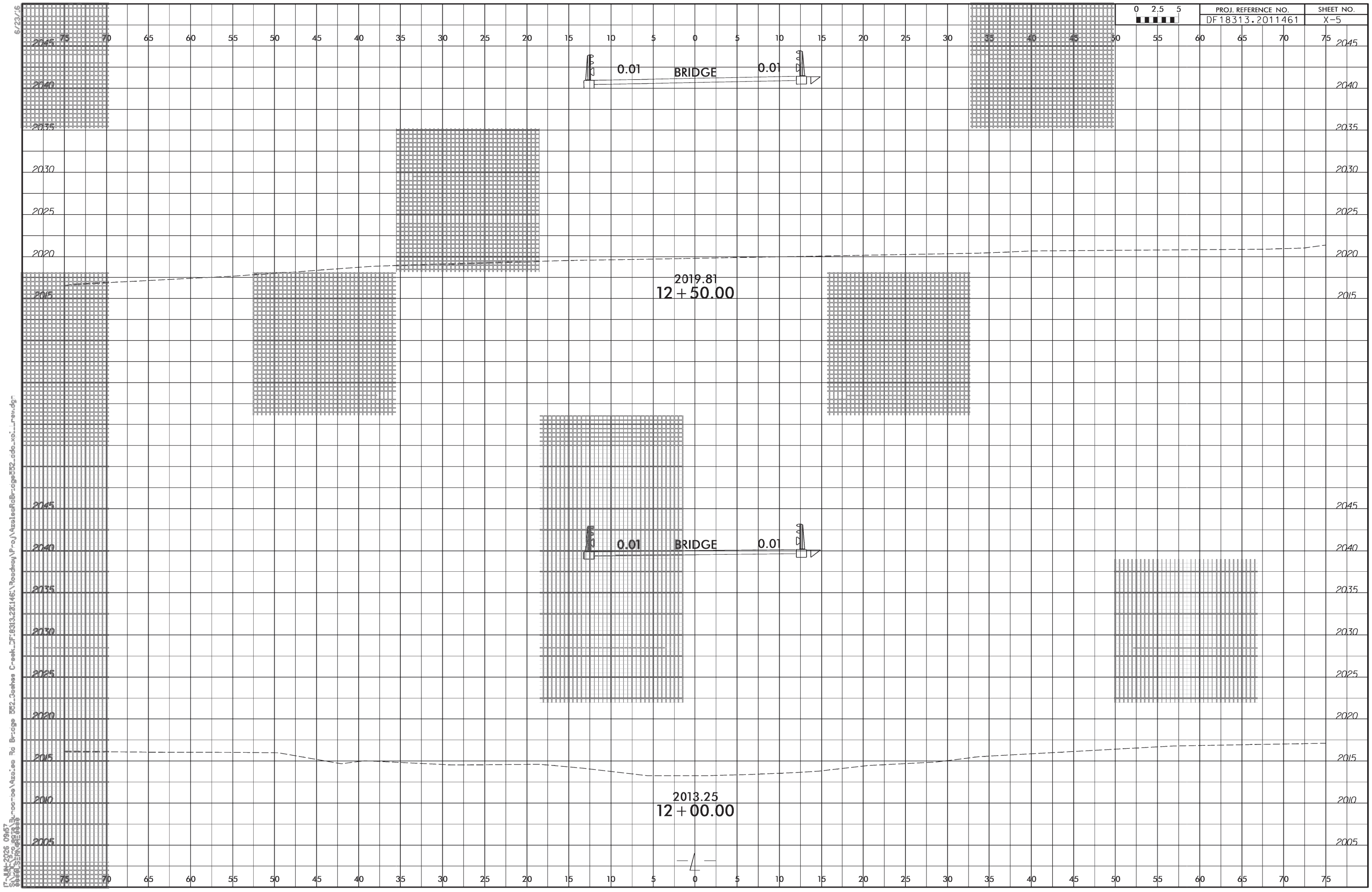

PROJ. REFERENCE NO.	SHEET NO.
DF18313.2011461	X-6

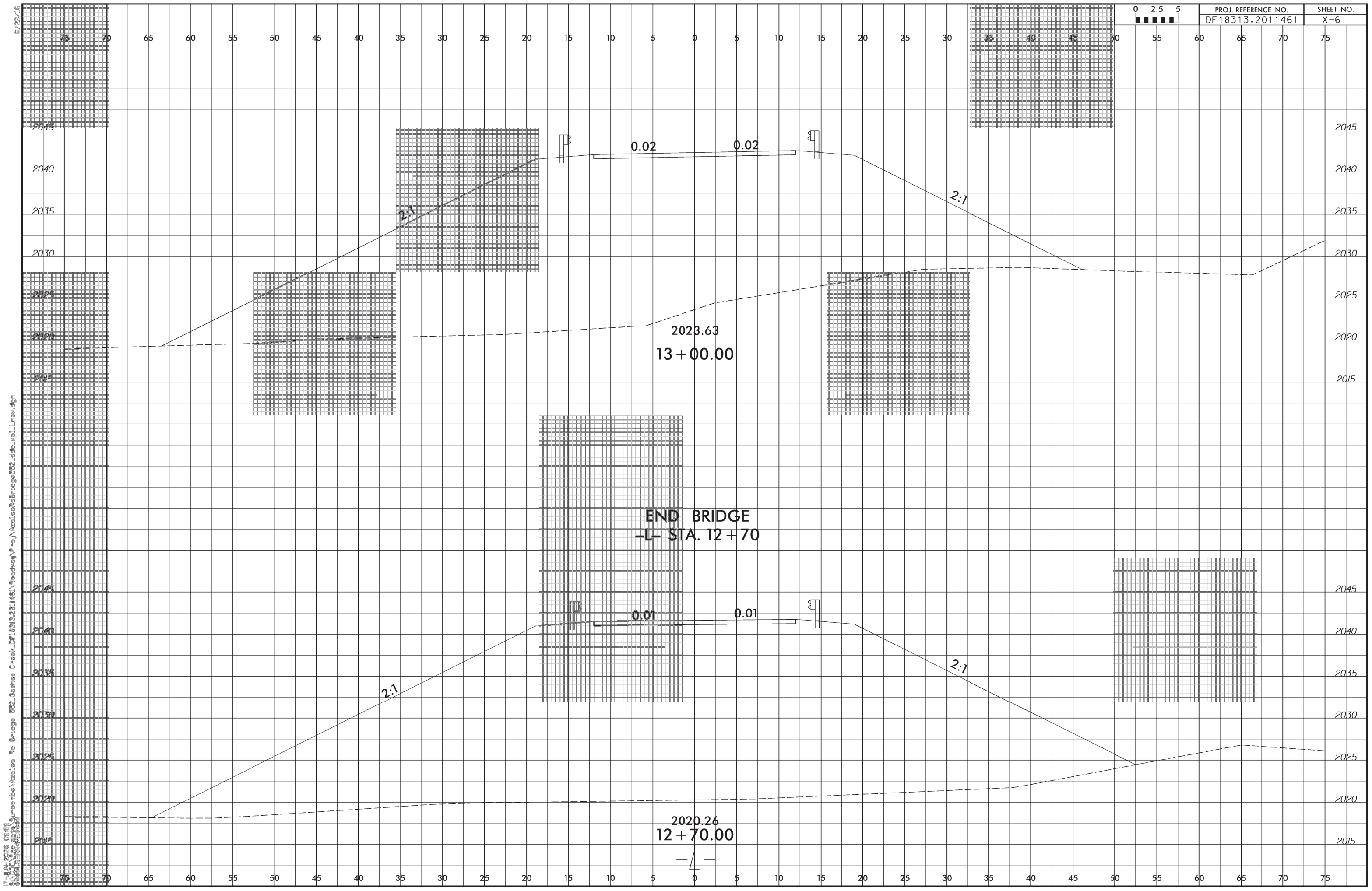

PROJ. REFERENCE NO.	SHEET NO.
DF18313.2011461	X-7

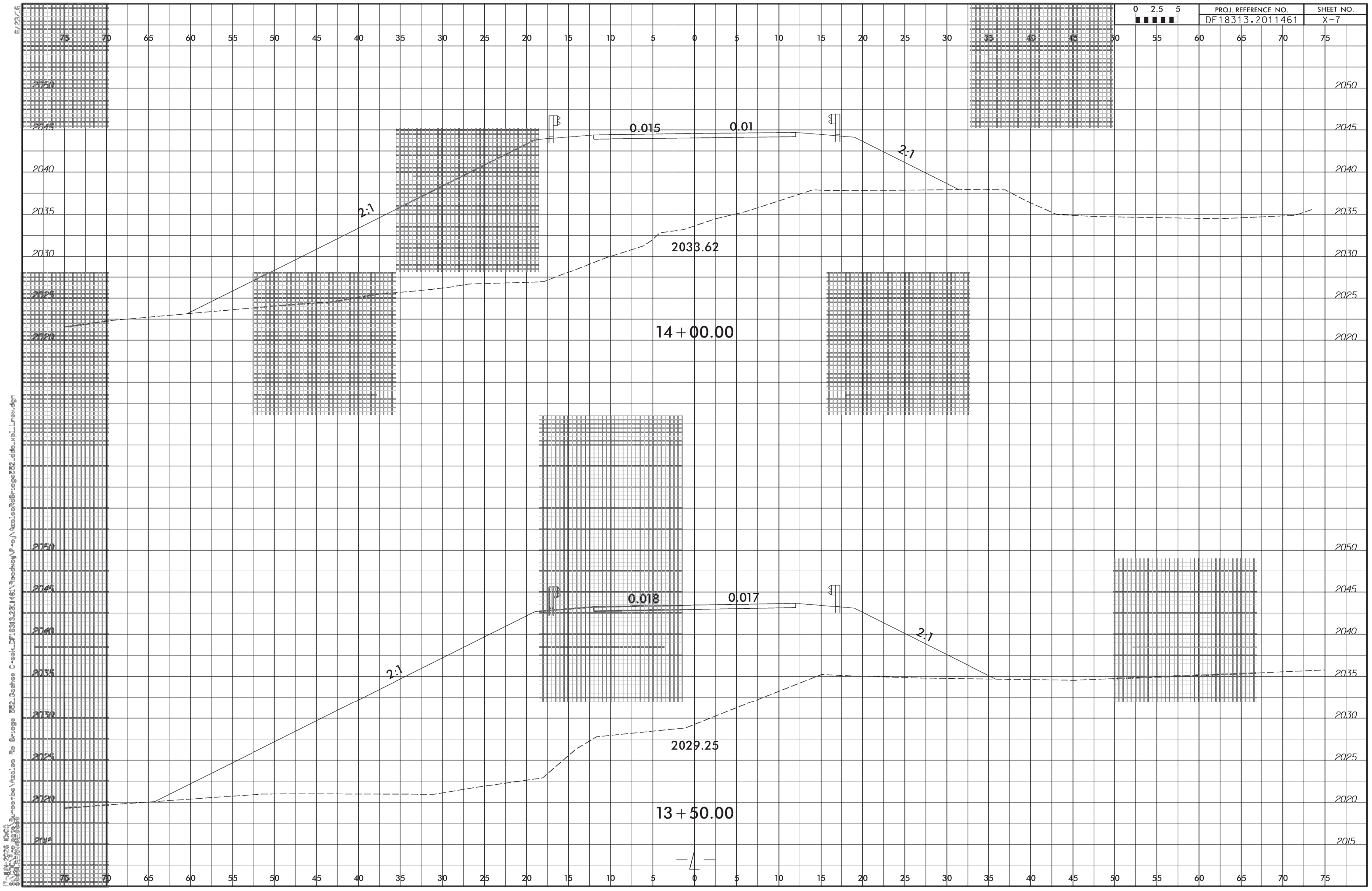

PROJ. REFERENCE NO.	SHEET NO.
DF18313.2011461	X-8

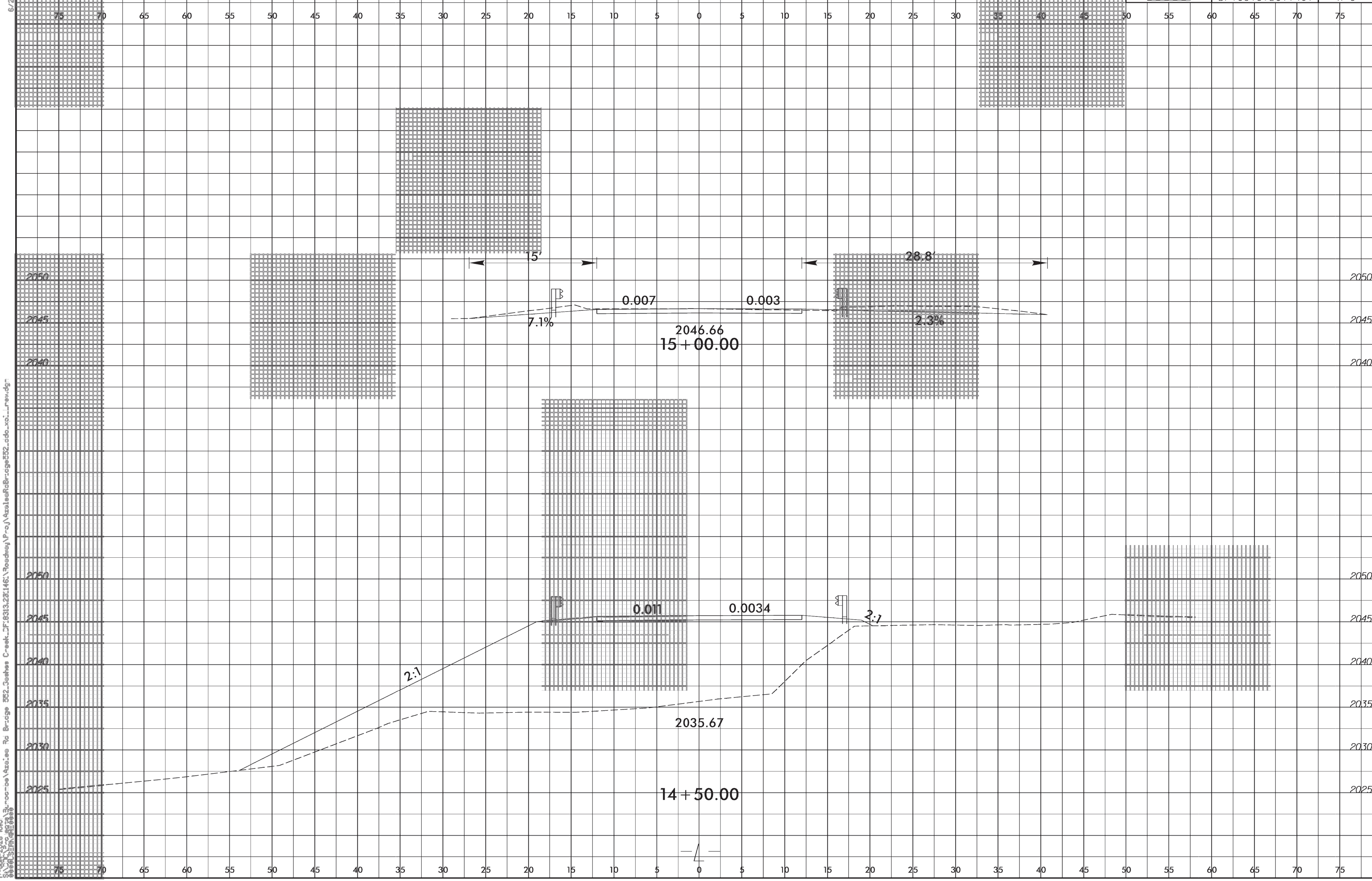

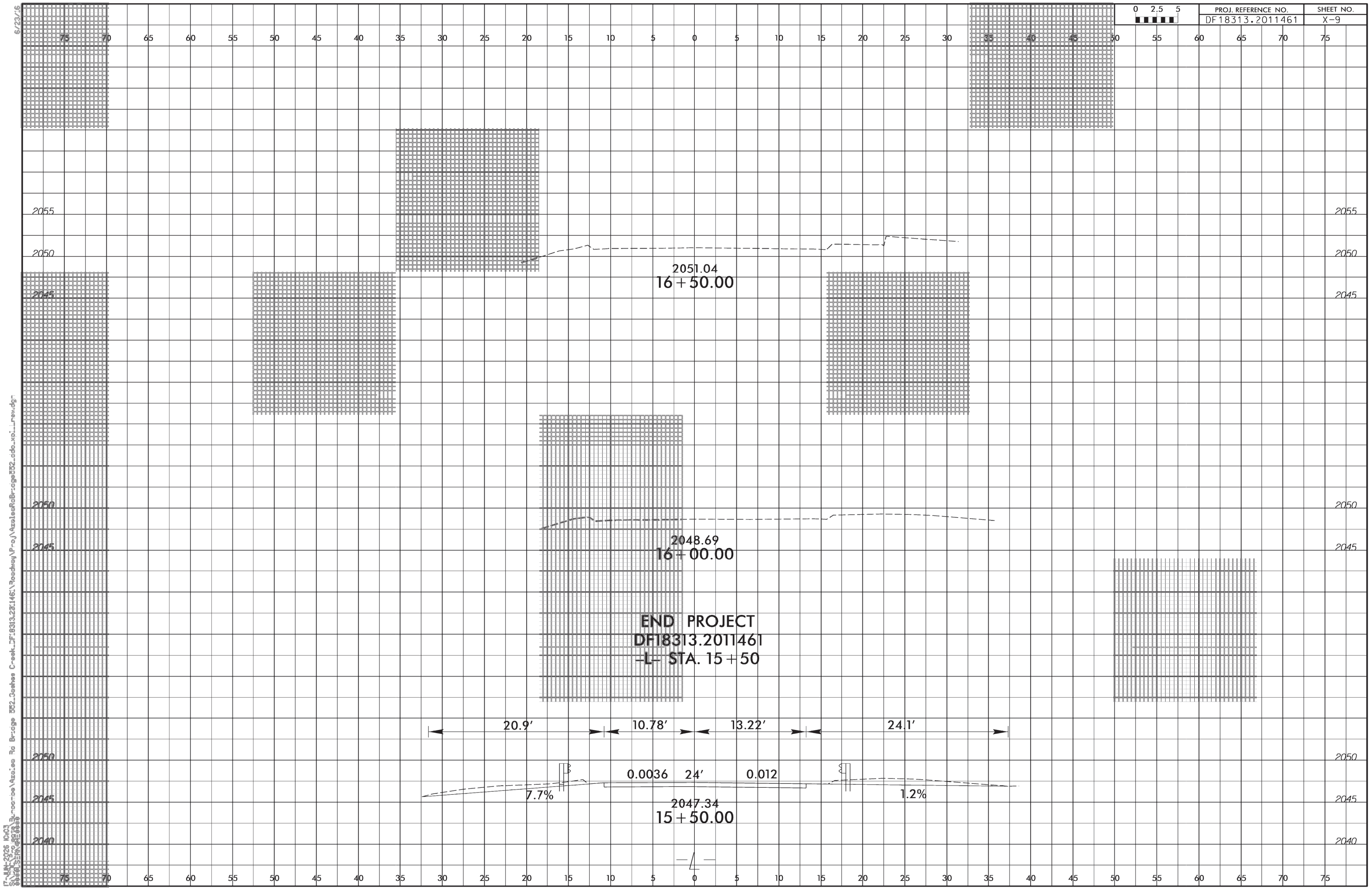
2051.04
16+50.00
2048.69
16+00.00
END PROJECT
DF18313.2011461
-L- STA. 15+50
20.9'
10.78'
13.22'
24.1'
0.0036
24'
0.012
7.7%
1.2%
2047.34
15+50.00